BOA Group

Your Flexible Solutions Partner

Expansion joints for HVAC systems, sound absorption and vibration absorption

Table of Contents

General
Expansion joints 1
Metal hoses 9

Product portfolio overview
Axial steel expansion joints 15
Sound absorbing expansion joints 17
Vibration absorbers 17
Rubber expansion joints 19
Metal hoses 24

Technical data
Axial steel expansion joints 25
Sound absorbing expansion joints 44
Vibration absorbers 45
Rubber expansion joints 48
Metal hoses 64

Installation instructions
Steel expansion joints 68
Rubber expansion joints 78
Metal hoses 86

Application examples 92

Expansion joint data sheet 95

Expansion compensation in pipes

Depending on their physical properties, most materials expand when their temperature is increased and contract when the temperature falls.

In pipe systems, this process is essentially made apparent by length changes in the individual pipe runs.

As, in general, pipes are fixed at at least two connection points, reactions to inhibited thermal expansion inevitably occur, with a corresponding increase in stresses in the material and reaction forces at the connection points.

If the boundary conditions allow, in general an attempt is made to absorb the pipe expansion, i.e. to naturally compensate for the expansion, by elastic (flexible) laying in the system.

If all natural expansion compensation options have been exhausted, expansion joints are provided to absorb length changes.

In addition, if compressors, pumps, turbines or motors are operated, the resulting mechanical vibrations must be absorbed to prevent damage to the connected pipes, valves, fittings and supporting structures.

Also, the allowable forces and moments must not be exceeded at the nozzles of compressors, turbines, tanks and columns.

Expansion joints are used for the application cases named above.

The heart of each expansion joint is the metal bellows (*), which has a convoluted geometry and thin walled design that enable it to act as a spring, although it must fulfil the following basic conditions in order to be used as an expansion element:

It must

- withstand the operating and test conditions (pressure, temperature) of the pipe system,
- be resistant to corrosion caused by internal and external influences,
- be able to absorb expansions and possibly vibrations flexibly and achieve a required life expectancy,
- have adequate buckling stability.

(*) Rubber expansion joints with their particular conditions of use constitute an exception.

Axial expansion joints

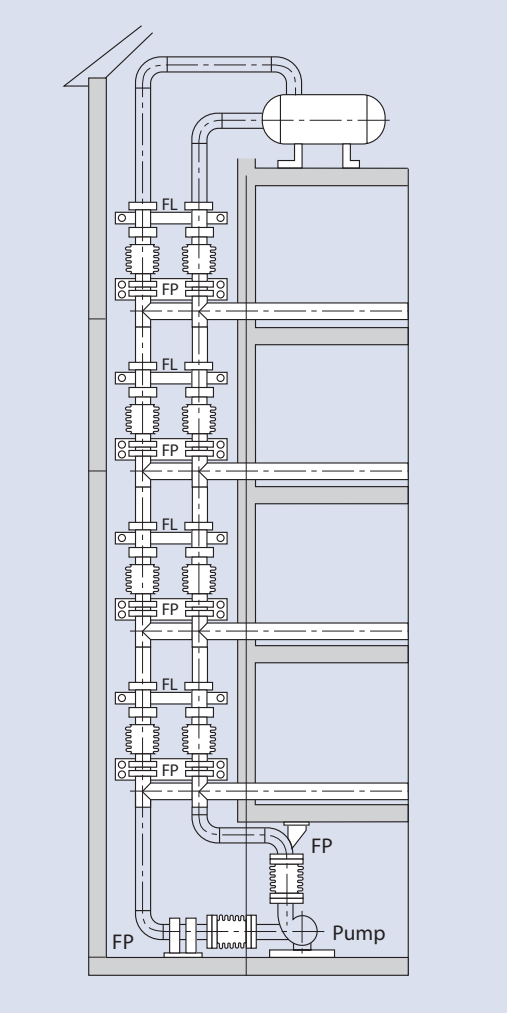

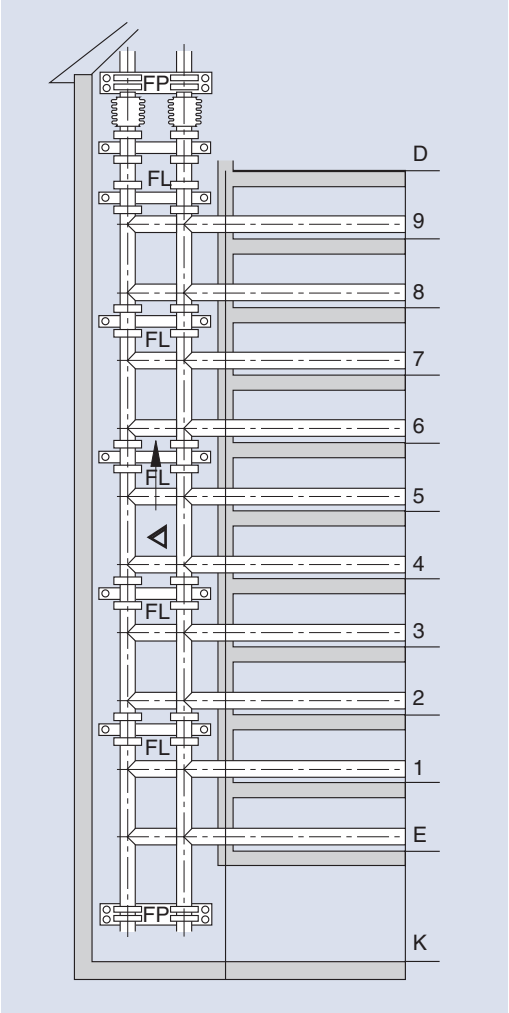

Axial expansion joints are suitable for absorbing axial expansions (lengthening) in straight lengths of pipes.

In addition, axial expansion joints are used

– to absorb vibrations and reduce structure-borne noise in pumps and compressors

– as flexible gaskets at the end of jacketed pipes in district heating systems

– in flue gas conduits of boilers and motors, for thermal expansion and vibrations

– as a disassembly joint at pumps, valves and plate heat exchangers

– for gas-tight wall penetrations of pipes in nuclear reactor construction, shipbuilding

– in tank and apparatus construction for absorbing differential expansion that occurs

Versatile and multi-purpose use of axial expansion joints requires appropriate fixed points and axial guide supports to be present.

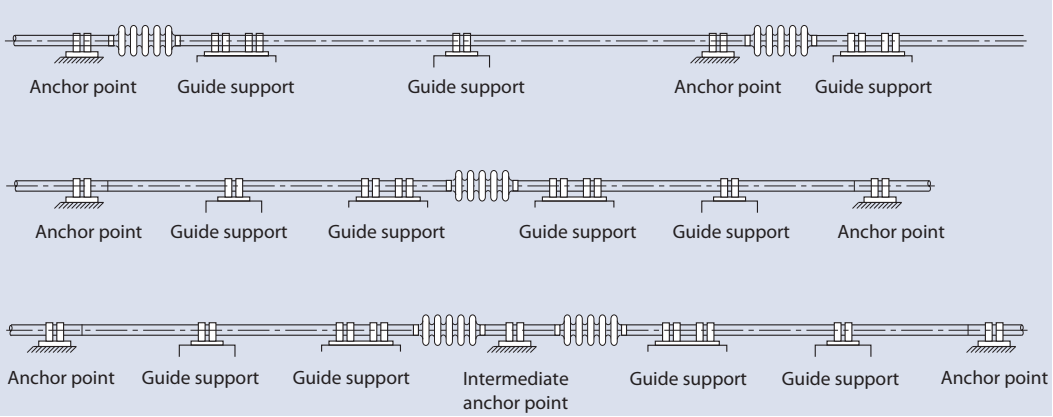
Anchor point
Guide support
Guide support
Anchor point
Guide support
Anchor point
Guide support
Guide support
Guide support
Guide support
Anchor point
Anchor point
Guide support
Guide support
Intermediate anchor point
Guide support
Guide support
Anchor point

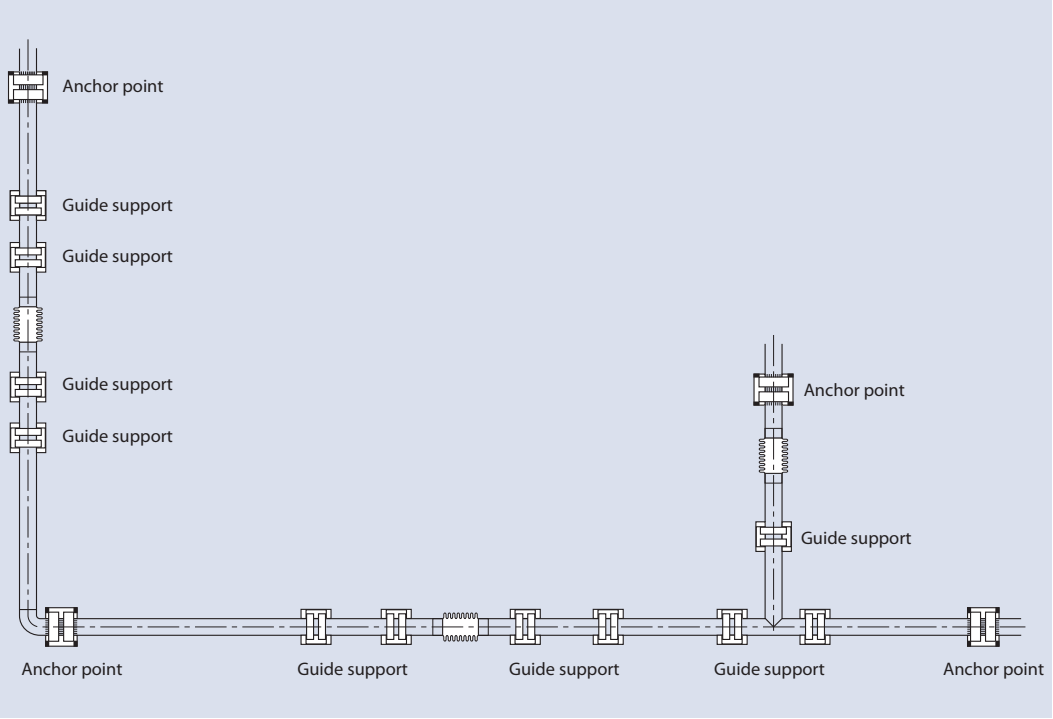
Anchor point
Guide support
Guide support
Guide support
Guide support
Anchor point
Guide support
Anchor point
Guide support
Guide support
Guide support
Anchor point

Inner sleeves

If high-frequency vibrations, turbulence or high flow velocities are to be expected in the fluid, we recommend the installation of expansion joints with inner sleeve.
The enclosed diagram: “Guideline for the use of an inner sleeve”, shows the limit curves for steam and gas and for liquids, above which use of inner sleeves is absolutely recommended.
Use of inner sleeves helps to protect the bellows and reduces its flow-induced vibrational excitation and deposits and wear.

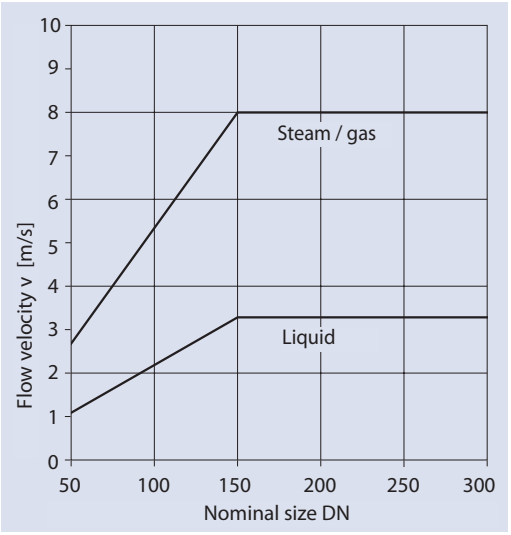

Determination of pipe expansion

The expansion (movement) to be taken up by the individual expansion joints must be determined on the basis of the pipe layout, the pipe lengths and the operating temperature.
Depending on the expansion joint type, axial or lateral movements can be absorbed. For precise determination of the movements that occur, especially if temperature-resistant and stainless pipe materials are used, it is recommended that the following formula be used for the calculation:

$$\Delta_{Ro} = \frac{L_o \cdot \Delta_t \cdot \alpha}{100} \text{ [mm]}$$

Δ_{Ro} = calculated pipe movement (mm)
L_o = Length of pipe between the anchor points (m)
Δ_t = temperature difference
α = temperature coefficient

Temperature coefficient α

For temperatures from [°C]	Temperature resistant pipe steels	Austenite 1.4541/1.4878	Austenite 1.4571
–190 to 0	–0.88	–1.42	–1.46
0 to 100	1.11	1.64	1.68
0 to 200	1.21	1.71	1.75
0 to 300	1.29	1.76	1.80
0 to 400	1.35	1.80	1.84
0 to 500	1.39	1.83	1.88
0 to 600	1.43	1.86	1.91

Expansion diagram for pipes made of mild steel

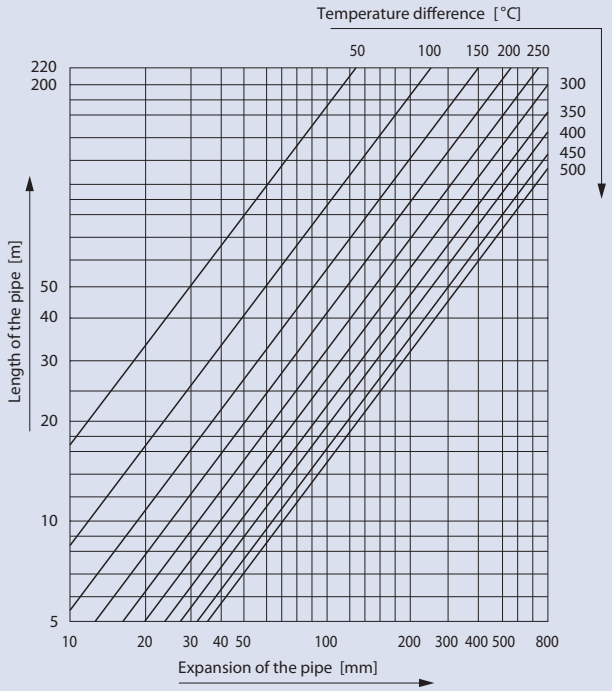

The task of anchor points in pipes is to safely and reliably absorb the forces that occur in the pipe and to assign the thermal expansion to the individual pipe sections.

The main stresses and loads, which have to be absorbed by the anchor points if unrestrained expansion joints are:

1. Pressure thrust F_{DR}
2. Bellows' inherent resistance F_E
3. Frictional forces F_{LR}

Re 1.

The pressure thrust tries to pull the expansion joint bellows apart. As, in almost all cases, the pressure thrust is far larger than the bellows' inherent resistance, it is not possible for equilibrium to be achieved between the bellows' inherent resistance and the pressure thrust.

Without appropriate anchor points, this would cause overstretching and therefore the destruction of the bellows. The pressure thrust (also called pressure reaction force) is calculated from the product of the bellows' cross-sectional area and the pressure.

$$F_{DR} = 10 \cdot p \cdot A_B \text{ [N]}$$

Re 2.

The bellows' own resistance is the force, which the bellows resist lengthening (extension) or shortening (compression). The specific inherent resistance of the bellows per + / - 1 mm extension is given in the technical tables as the spring characteristic c_{ax} [N/mm].

$$F_E = c_{ax} \cdot \Delta_{ax} \text{ [N]}$$

Re 3.

The pipe's frictional forces depend on the pipe weight including the fluid it carries, insulation and the coefficient of friction of the pipe support. Empirical values for pipe guide friction values μ_{LR}:

Steel/Steel	0.15–0.5
Steel/PTFE	0.1 –0.25
Roller bearing	0.03–0.1

$$F_{LR} = 9.81 \cdot G_{LR} \cdot \mu_{LR} \text{ [N]}$$

The largest proportion of the force on the anchor point, where axial expansion joints are used, comes from the pressure thrust.

Axial expansion joints introduce an elastic or flexible interruption for the pipe, with which, as a result of the prevailing operating pressure in the pipe, the pressure thrust is released and has to be absorbed by suitable anchor points (Fig. 1).

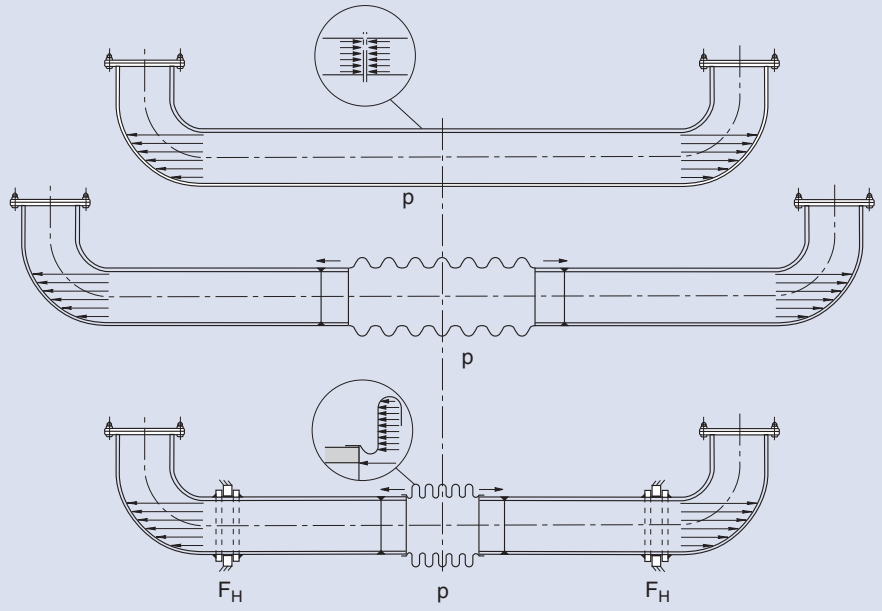

Fig. 1

Anchor load

A differentiation is made between the main anchors and intermediate anchors.

Main anchors are always found at the start and end of the pipe and at bends (change of direction of the pipe) and branches, i.e. where the full reaction forces occur (Fig. 2).

$$F_H = F_{DR} + F_E + \Sigma F_{LR} \text{ [N]}$$

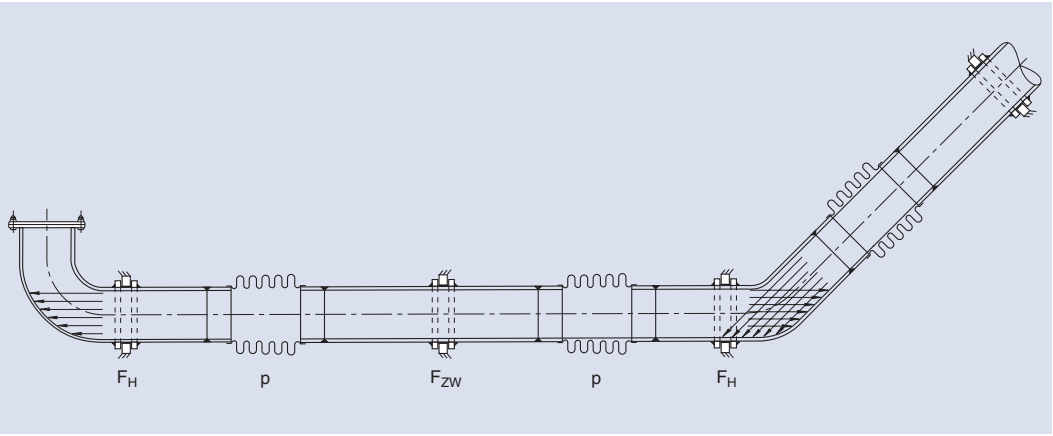

Fig. 2

The pressure thrust is practically removed from the intermediate anchors and axially these only absorb the inherent resistance of the expansion joint and the friction forces from the pipe guides.

$$F_{ZW} = F_E + F_{LR} \text{ [N]}$$

Note:

If, for structural or space reasons, it is not possible to set any anchors, restrained expansion joints must be used.

A_B	= bellows effective area [cm^2]
c_{ax}	= axial spring rate [N/mm]
F_{DR}	= pressure thrust [N]
F_E	= bellows' inherent resistance [N]
F_{LR}	= pipe friction force [N]
F_H	= main anchor load [N]
F_{ZW}	= intermediate anchor load [N]
p	= design or test overpressure [bar]
Δ	= pipe movement that occurs [mm]
G_{LR}	= pipe weight [kg]
μ_{LR}	= coefficient of bearing friction [–]

Vibrations

In the context of sound insulation and vibration absorbers, **mechanical vibrations** are within the frequency range up to the audible limit (Fig. 1).

Mechanical vibrations are generated in units and are transmitted through the fluid, but mainly through the **pipe**, in the entire pipe system.

The vibrations propagated in this way are perceived on the one hand as annoying noise, and on the other hand they cause large stresses in the materials subjected to the vibrations.

In the case of pipes laid without sound insulation and/or vibration absorbers, fractures and failures can very soon occur, which endanger the operating safety and economic efficiency of a plant or installation.

Range of mechanical vibrations

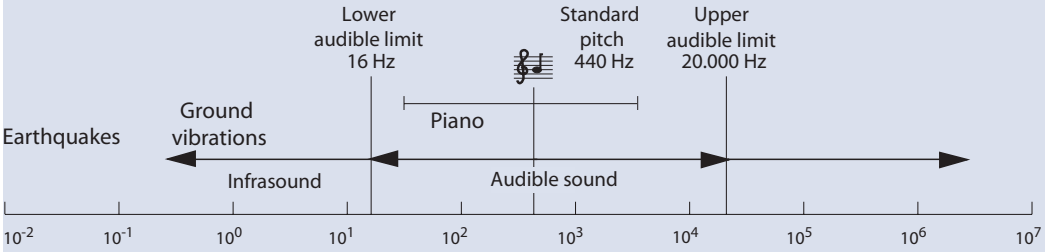

Fig. 1

Vibration absorbers / sound absorbing expansion joints

Vibration absorbers / sound absorbing expansion joints are very flexible pipe elements, which thanks to their flexible structure, are able to remove part of the energy from a vibrating system. Fig. 2 shows the oscillogram of an absorbed vibration that has occurred in this way.

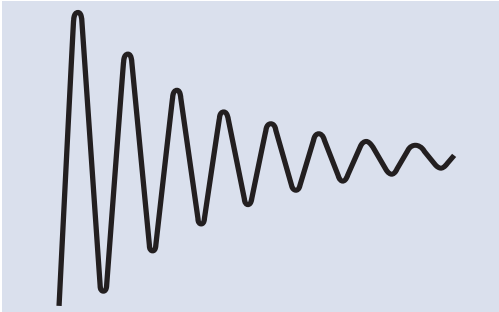

Fig. 2

Use of austenitic steels and elastomers of different quality ideally fulfils the highest requirements with regard to:

– Pressure
– Temperature
– Corrosion
– Long life expectancy

Operating temperatures from –10 °C to 200°C and nominal pressures from PN 6 to PN 16 in the standard types can be easily covered.

Special types are possible for higher pressures and temperatures.

Low-noise plant

By choosing the right expansion joint and its optimum positioning see installation instructions), you have taken the most important measures to prevent the propagation of vibrations in the pipe system.
However, to achieve the objective of low-noise plant, the following problem areas must also be solved:

The vibration source

When choosing the unit, attention must be paid to the most quietly and smoothly running appliance.

Transfer to the building or engineering structure

Units, which generate mechanical vibrations transfer them to the building as structure-borne sound. Flawless structure-borne sound insulation is indispensible for all these devices (see Fig. 3).

If there is a high airborne sound level in the room, there is a risk of the pipes, vessels, tanks, boiler plants and even the building structure becoming excited. In this case, the unit must be clad, or the room must be clad with sound-absorbing materials (Fig. 4).

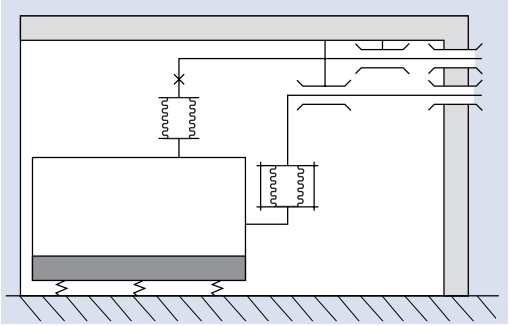

Fig. 3

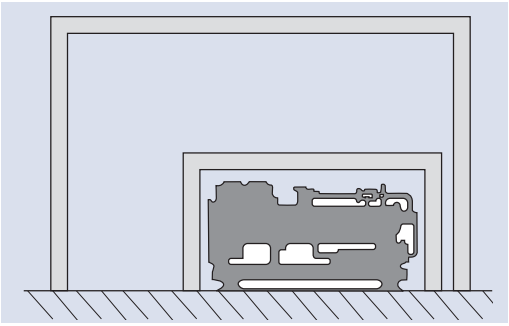

Fig. 4

General metal hoses

Application

The range of metal hoses kept in stock includes all products in the standard diameters, dimensions and materials, which are used in

- Gas installation
- Heating installation
- Cooling systems
- Sanitary installation
- Solar engineering
- Steam supply
- Fire safety engineering
- Air conditioning

and similar industries.

Definition of terms used

Allowable operating temperatur t_B [°C]:
Operating temperature of a hose assembly, which results from the max. allowable operating temperature of the weakest component or the weakest connection.

Temperature factor t_P:
Factor for reduction of the allowable operating pressure. It corrects the allowable calculated strength of the metal hose material depending on the material used and the design temperature.

Burst pressure p_R [bar]:
Maximum inner overpressure, which is reached before a component bursts.

Nominal pressure PN:
The nominal pressure level rounded down according to EN 1333, which results from the max. allowable design pressure.

Dynamic design pressure p_B dyn. [bar]:
Allowable operating pressure of a metal hose made of the standard material 1.4571 at 20 °C and a dynamic load of 50 000 load cycles according to ISO 10380 (see also “Life expectancy” section)

Static design pressure p_B [bar]:
Allowable operating pressure of a metal hose made of the standard material 1.4571 at 20 °C, for use without cyclical movements, calculated as 1/4 of the burst pressure

Test pressure p_P [bar]:
Overpressure, which a hose assembly is exposed to in order to check its compressive strength.

Allowable operating pressure p_B [bar]:
Operating pressure of a hose assembly, which results from the dynamic or static design pressure or the maximum allowable operating pressure of a hose fitting or its joining methods – whichever value is the lower – reduced by the temperature factor tP corresponding to the operating temperature and the reduction factor D_P, which depends on the type of operation.

Bend radius R [mm]:
Radius of the circular arc of corrugated metal hose, relative to the hose axis.

Minimum bend radius R_{min} [mm]:
Bend radius for one-off movement. The bend radius must not be below the specified minimum.

Nominal bend radius R_N [mm]:
Dynamic bend radius for frequent movement according to ISO 10380. Undergoing the nominal bending radius reduces the life expectancy of the metal hose assembly.

Torsion:
Twisting of the corrugated metal hose around its own axis. Torsion results in premature failure of the metal hose assembly.

Life expectancy:
The life expectancy of a hose under dynamic, i.e. under constantly recurring movement is determined using the method described in the international “ISO 10380” standard. With this method, the hose assembly in the U-bend position nominal bend radius RN and vertical movement (see also page 12) under design pressure, must withstand 10000 load cycles without leaking.

Metal hoses are tested using this method, and the dynamic bend radii given in column RN of the technical tables meet these requirements.

In case of higher numbers of load cycles the allowable bend radius must be increased. Vice versa, a smaller bend radius reduces the expected number of load cycles.

Pressure loss:
Due to their convoluted (corrugated) profile, metal hose assemblies have a higher resistance to flow than smooth pipes. Here the nominal size, fluid and flow rate play a role.

In the case of short hose assemblies, this pressure loss can be ignored; however, it should be checked for longer lengths.

Allowable operating pressure p_B

The design pressure given in the technical tables relates to a temperature of 20 °C. At higher operating temperatures, due to the drop in strength of the hose materials, the allowable operating pressure p_B must be reduced by the respective temperature factor t_P given in the following table.

Effect of the operating temperature

Temperature reduction factors t_P

Temp. [°C]	20	50	100	150	200	250	300	350	400	450	500	550	600	650
1.4301 ISO 11	1	0.93	0.81	0.70	0.64	0.60	0.57	0.54	0.52	0.51	0.50	0.49	0.47	0.19
1.4541 ISO 15	1	0.94	0.86	0.76	0.73	0.70	0.67	0.65	0.63	0.61	0.60	0.59	0.57	0.19
1.4404 ISO 19	1	0.93	0.83	0.72	0.66	0.62	0.59	0.56	0.55	0.53	0.51	0.50	0.50	
1.4435 ISO 19 a	1	0.93	0.83	0.72	0.66	0.62	0.59	0.56	0.55	0.53	0.51	0.50	0.50	
1.4571 ISO 21	1	0.94	0.84	0.75	0.69	0.65	0.62	0.60	0.58	0.56	0.54	0.53	0.52	

Effect of the type of operation

If hose assemblies are installed in operating systems in which pressure shocks, strong pressure pulsations or sudden movements occur, the allowable operating pressure must be adjusted by a further factor D_P.

Reduction factor D_P

	Uniform, frequent movements, vibrations with small amplitudes	Sudden movements, vibrations with large amplitudes
Uniform flow	1.0	0.8
Pulsating, non-uniform flow	0.8	0.5
Pressure shocks, pulsating flow	0.5	0.35

Determination of the allowable operating pressure p_B

p_B = design pressure · t_P · D_P [bar]

Allowable test pressure: 1.5 · design pressure

Straight metal hose assembly for parallel displacement

(Movements transversely to the hose plane are not allowed)

Type of installation: straight hose assembly

Application: lateral displacement
Not suitable for recurring movements!

Formula:

$\cos \alpha = 1 - a / (2 \cdot R_N)$

$\cos \alpha$ may not be 0.5, otherwise radius $R > R_N$ must be chosen.

$NL = 0.035 \cdot R_N \cdot \alpha + 2 \cdot DN + 2 \cdot l$

$EL = 2 \cdot R_N \cdot \sin \alpha + 2 \cdot DN + 2 \cdot l$

Installation for one-off bending (to compensate for parallel pipe misalignments)

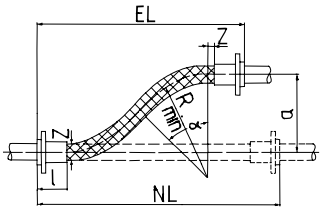

Straight metal hose assembly for lateral movements

(Movements transversely to the hose plane are not allowed)

Type of installation: straight hose assembly

Application: lateral displacement
– large amplitudes
– low stroke frequency

Formula:

$NL = 4.5 \cdot \sqrt{R_N \cdot s} + 2 \cdot DN + 2 \cdot l$

$EL = \approx NL \cdot (1 - 0.15 \cdot s / NL)$

Minimum hose length $NL_{min.} = 7 \cdot s + 2 \cdot l$

Installation for lateral movement capacity

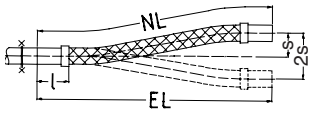

R_N = dyn. nominal bend radius of the chosen hose type [mm]
DN = nominal size
a = displacement from the axis [mm]
s = lateral movement capacity [mm]
l = length of the hose fitting
α = bend angle [°]
NL = nominal length [mm]
EL = built-in length [mm]

Installation for absorbing vertical stroke movements

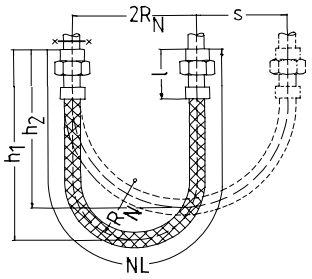

U bends for vertical movement
(movements across the hose plane are not allowed)

Type of installation: vertical 180° bend

Type of movement: vertical stroke movement
– large amplitudes
– low stroke frequency

Formulae :

$NL = (2.5 \cdot R_N + s) \cdot 1.57 + 2 \cdot DN + 2 \cdot l$

$h_1 = R_N + 0.785 \cdot s + DN + l$

$h_2 = R_N + s / 2 + DN + l$

Installation for absorbing horizontal stroke movements

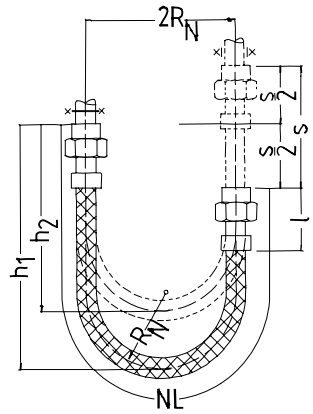

U bends for vertical movement
(movements across the hose plane are not allowed)

Type of installation: vertical 180° bend

Type of movement: vertical stroke movement
– large amplitudes
– low stroke frequency

Formulae :

$NL = R_N \cdot \pi + s / 2 + 2 \cdot DN + 2 \cdot l$

$h_{1\,max} = R_N + s / 2 + DN + l$

$h_{2\,min} = R_N + DN + l$

R_N = dyn. nominal bend radius of the chose hose type [mm]
DN = nominal size
l = length of the hose fitting
h_1 = maximum height of the 180° bend [mm]
h_2 = minimum height of the 180° bend [mm]
s = movement [mm]
NL = nominal length [mm]

U bends for vertical and horizontal movement
(movements across the hose plane are not allowed)

Type of installation: vertical 180° bend

Type of movement: vertical and horizontal stroke movement
– large amplitudes
– low stroke frequency

Formulae:

$$NL = 1.57 \cdot (2 \cdot R_N + s_1) + s_2 / 2 + 2 \cdot DN + l$$

$$h_{1\,max} = R_N + 0.785 \cdot s_1 + s_2 / 2 + DN + l$$

$$h_{2\,min} = R_N + s_1 / 2 + DN + l$$

Installation for absorbing vertical and horizontal stroke movements

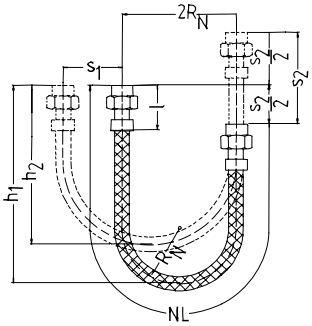

90° metal hose assembly for lateral movement capacity
(Movements across the hose plane are not allowed)

Type of installation: 90° hose assembly

Type of movement: lateral movement capacity in 1 axis
– low amplitudes
– low stroke frequency

Formulae:

$$\cos \alpha = 1 - s / (2 \cdot R_N)$$

$$NL = R_N \cdot (1.57 + 0.035 \cdot \alpha) + 2 \cdot DN + 2 \cdot l$$

$$a = R_N + 2 \cdot R_N \cdot \sin \alpha + DN + l$$

$$b = R_N + R_N \cdot (0.035 \cdot \alpha - 2 \cdot \sin \alpha) + DN + l$$

The angle α must not exceed 60°!
cos α must be ≥ 0.5,
otherwise R > RN must be chosen

Installation for absorbing thermal expansion from one direction

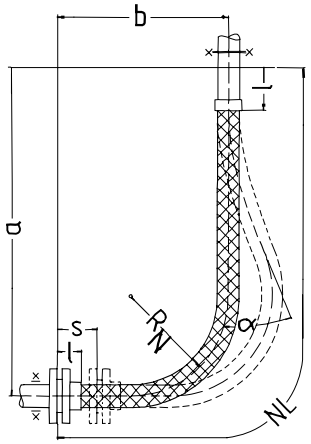

R_N = dyn. nominal bend radius of the chose hose type [mm]
DN = nominal size
a = installation distance [mm]
b = installation distance [mm]
h_1 = maximum height of the 180° bend [mm]
h_2 = minimum height of the 180° bend [mm]
s = movement capacity [mm]
s_1 = horizontal stroke [mm]
s_2 = vertical stroke [mm]
l = length of the hose fitting
α = bend angle [°]
NL = nominal length [mm]

Installation for absorbing thermal expansion from two directions

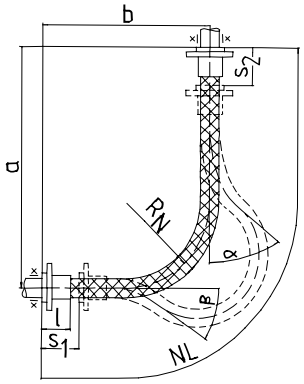

990° hose assembly for movement capacity in 2 axes

(movements across the hose plane are not allowed)

Type of installation: 90° hose assembly

Type of movement: lateral movement capacity in 2 axes
– low amplitudes
– low stroke frequency

Formula:

$$\cos \alpha = 1 - s_1 / (2 \cdot R_N)$$

$$\cos \beta = 1 - s_2 / (2 \cdot R_N)$$

$$NL = R_N \cdot (1.57 + 0.035 \cdot \alpha + 0.035 \cdot \beta) + 2 \cdot DN + 2 \cdot l$$

$$a = R_N + R_N \cdot (2 \cdot \sin \alpha + 0.035 \cdot \beta - 2 \cdot \sin \beta) + DN + l$$

$$b = R_N + R_N \cdot (2 \cdot \sin \beta + 0.035 \cdot \alpha - 2 \cdot \sin \alpha) + DN + l$$

The angle α must not exceed 60°! cos α and cos β must be ≥ 0.5, otherwise R > RN must be chosen

Installation and calculation for absorption of vibrations

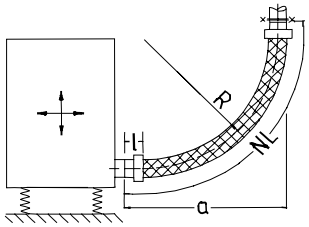

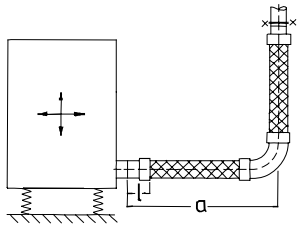

90° bend for absorbing vibrations

Type of installation: 90° hose bend or 90° dog-leg

Application: All-round vibrations
– small amplitudes
– high stroke frequency

Formula:

$$NL = 2 \cdot R_N + 2 \cdot l$$

$$c = 1.27 \cdot R_N + l$$

R_N = dyn. nominal bending radius of the chosen hose type [mm]
DN = nominal size
a = installation distance [mm]
b = installation distance [mm]
c = side length [mm]
s_1 = movement capacity [mm]
s_2 = movement capacity [mm]
l = length of the hose fitting
α = bend angle [°]
β = bend angle [°]
NL = nominal length [mm]

Product portfolio overview

Steel expansion joints with weld ends

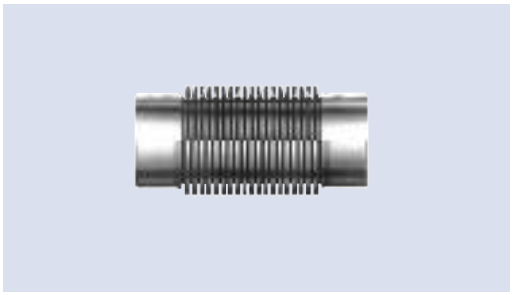

Axial steel expansion joint
Bellows made of 1.4571 (up to DN 50) or 1.4541 (from DN 65), weld ends attached both sides made of mild steel **Type BKT-7110 000 (old: 307/210) DN ...., PN ..., Δ_{ax} +/– ...., Bl ....**

Axial steel expansion joint
Bellows made of 1.4571 (up to DN 50) or 1.4541 (from DN 65), weld ends attached both sides made of **1.4571 Type BKT-7110 00S-KW DN ...., PN ..., Δ_{ax} +/– ...., Bl ....**

Axial steel expansion joint
Bellows made of 1.4571 (up to 50) or 1.4541 (from DN 65), weld ends attached both sides made of mild steel, with inner sleeve and protective tube made of mild steel, **suitable for Δ_{ax} without prestressing Type BKT-7119 00X (old: 307/224) DN ...., PN ..., Δ_{ax} ...., Bl ....**

Axial steel expansion joint
Bellows made of 1.4571, weld ends attached both sides made of 1.4571, with inner sleeve and protective tube made of **1.4571 or 1.4404, suitable for Δ_{ax} without prestressing Type BKT-7119 00S-KW DN ...., PN ..., Δ_{ax} ...., Bl ....**

Steel expansion joints with flange connection

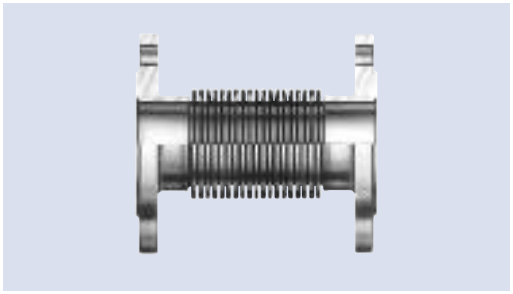

Axial steel expansion joint
Bellows made of 1.4571 (up to DN 50) or 1.4541 (from DN 65), flange connection both sides made of mild steel **Type BKT-7120 000 (old: 307/211) DN ...., PN ..., Δ_{ax} +/– ...., Bl ....**

Axial steel expansion joint
Bellows made of 1.4571 (up to DN 50) or 1.4541 (from DN 65), flange connections both sides made of **1.4571 Type BKT-7120 00S-KW DN ...., PN ..., Δ_{ax} +/– ...., Bl ....**

Axial steel expansion joint
Bellows made of 1.4571 (up to 50) or 1.4541 (from DN 65), flange connections both sides made of mild steel, with inner sleeve and protective tube made of mild steel, **suitable for Δ_{ax} without prestressing Type BKT-7129 00X (old: 307/225) DN ...., PN ..., Δ_{ax} ...., Bl ....**

Axial steel expansion joint
Bellows made of 1.4571, flange connection both sides made of 1.4571, with inner sleeve and protective tube made of **1.4571 or 1.4404, suitable for Δ_{ax} without prestressing Type BKT-7129 00S-KW DN ...., PN ..., Δ_{ax} ...., Bl ....**

Steel expansion joints for Mannesmann press fitting system

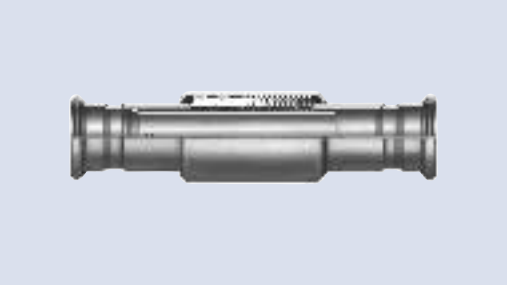

Axial steel expansion joint with Mannesmann press fitting connector, bellows made of 1.4571, weld ends attached both sides with connector made of mild steel with inner sleeve and protective tube made of mild steel, **suitable for Δ_{ax} without prestressing Type BKT-7179 00X-MS DN ...., PN ..., Δ_{ax} +/– ...., Bl ....**

Axial steel expansion joint with Mannesmann press fitting connector, bellows made of 1.4571, weld ends attached both sides with connector made of **1.4571 or 1.4404, with inner sleeve and protective tube made of 1.4571 or 1.4404 Type BKT-7179 00X-ME DN ...., PN ..., Δ_{ax} +/– ...., Bl ....**

Steel expansion joints with threaded sockets or soldering ends

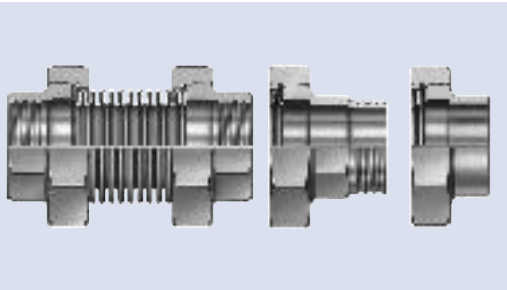

Axial steel expansion joint
Bellows made of 1.4571, threaded sockets on both sides with protective tube **suitable for Δ_{ax} without prestressing Type BKT-7162 00S (old: 307/245)**

Connection
TI (malleable cast iron, female thread) or
RI (gunmetal, female thread) or
TA (malleable cast iron/male thread) or
RA (gunmetal/male thread)
EI (stainless steel/female thread)
LF (soldering fitting)

DN ...., PN ..., Δ_{ax} ...., Bl ....

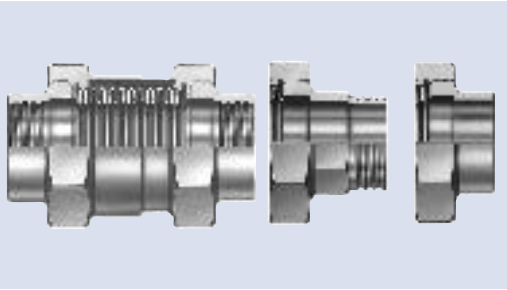

Axial steel expansion joint
Bellows made of 1.4571, threaded sockets on both sides **suitable for Δ_{ax} without prestressing Type BKT-7160 00S (old: 307/243)**

Connection
TI (malleable cast iron, female thread) or
RI (gunmetal, female thread) or
TA (malleable cast iron/male thread) or
RA (gunmetal/male thread)
EI (stainless steel/female thread)
LF (soldering fitting)

DN ...., PN ..., Δ_{ax} ...., Bl ....

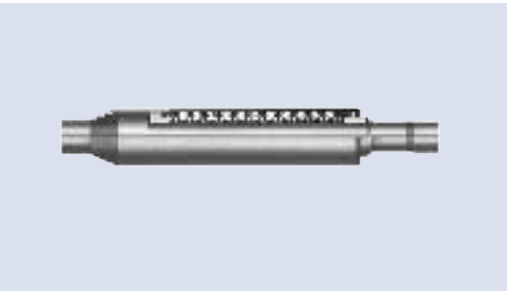

Bellows made of bronze, soldering ends on both sides made of copper with external sleeve made of copper, prestressed
Type BOA-I DN ...., PN ..., Δ_{ax} ...., Bl ....

Product portfolio overview

Steel expansion joints with loose flanges

Axial steel expansion joint
Bellows and collar made of 1.4571 (up to DN 50) or 1.4541 (from DN 65), loose flange both sides made of mild steel
Type BKT-7150 000 (old: 307/241)
DN ...., PN ..., Δ_{ax} +/– ...., Bl ....

Sound absorbing expansion joints and vibration absorbers

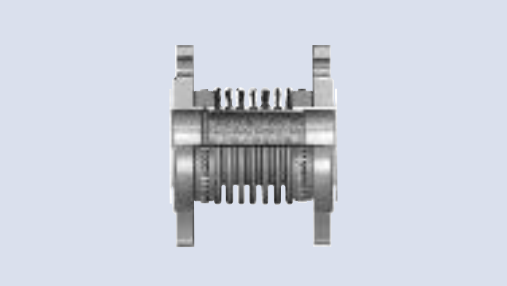

Sound absorbing expansion joint
Bellows and collar made of 1.4571 (up to DN 50) made of 1.4541 (from DN 65), loose flange both sides made of mild steel, with inner sleeve made of wire mesh (up to DN 150)
Type BKT-7951 00S (old: 303/445)
DN ...., PN ..., Δ_{ax} +/– ...., Bl ....

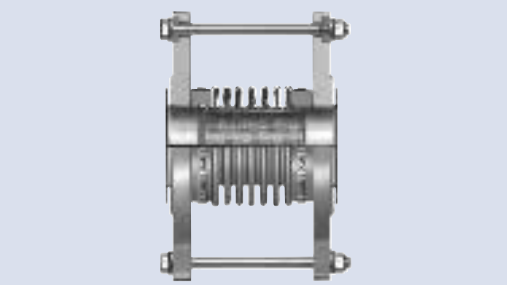

Sound absorbing expansion joint
Bellows and collar made of 1.4571 (up to DN 50), made of 1.4541 (from DN 65), loose flange both sides. Loose flange made of mild steel, with tie rod restraint made of mild steel, with inner sleeve made of wire mesh (up to DN 150) only for vibration absorption
Type BKT-7951 DFS (old: 303/487)
DN ...., PN ..., Bl ....

Vibration absorbers
Bellows and collar made of 1.4571, loose flange both sides made of mild steel
Type BOA-ALPHA C
DN ...., PN ..., Bl ....

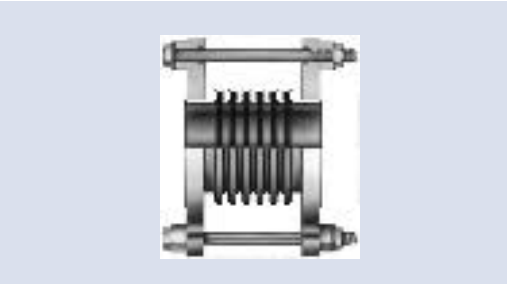

Vibration absorbers
Bellows and collar made of 1.4571, loose flange both sides made of mild steel with tie-rod restraint made of mild steel
Type BOA-EPSILON C
DN ...., PN ..., Bl ....

Vibration absorbers

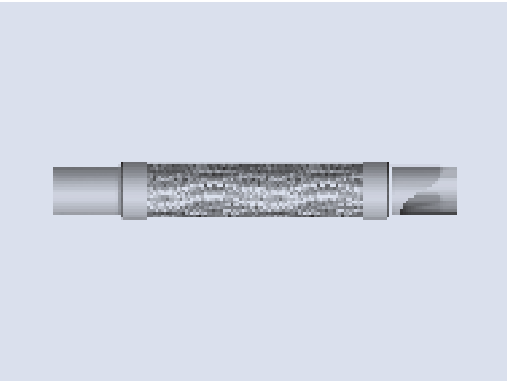

Vibration absorbers
Pliable tubing made of CuSn 6, braid made of 1.4301, soldering ends made of copper
Type BOA-OMIKRON
DN . . . . , PN . . ., Bl . . .

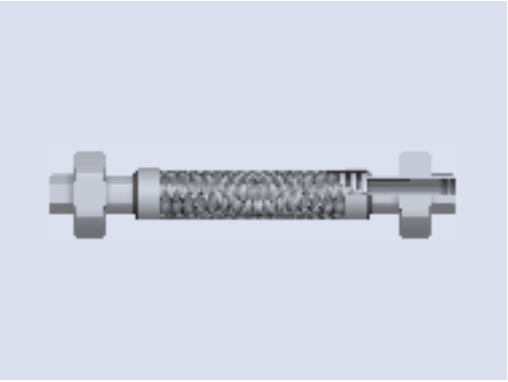

Vibration absorbers
Pliable tubing made of 1.4541, braid and end sleeves made of 1.4301, threaded coupling made of malleable cast iron
Types BOA-JOTA and BOA-KAPPA
DN . . . . , PN . . ., Bl . . .

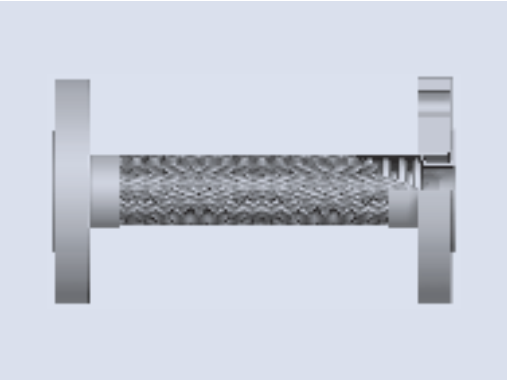

Vibration absorbers
Pliable tubing made of 1.4541, braid and end sleeves made of 1.4301, lapped pipe end made of 1.4571 Loose flanges made of St 37-2
Types BOA-SIGMA and BOA-OMEGA
DN . . . . , PN . . ., Bl . . .

Rubber expansion joint
Bellows inner ply[1)], nylon cord reinforcement, threaded sockets on both sides made of GGG-40, zinc-plated
Type BKT-3160 00S-B –. . .[1)]
DN . . . . , PN . . .

[1)] **EPDM**

Rubber expansion joint
Bellows inner ply[1)], nylon cord reinforcement, threaded sockets on both sides made of GGG-40, zinc-plated
Type BKT-3160 00S-A –. . .[1)]
DN . . . . , PN . . .

[1)] **EPDM**
EPDMT
CHLOROPREN
NITRIL
EPDM-SAN

Rubber expansion joint
Bellows inner ply[1)], nylon cord reinforcement, threaded sockets on both sides made of GGG-40, zinc-plated
Type BKT-3160 00S-D –. . .[1)]
DN . . . . , PN . . .

[1)] **EPDM**
EPDMT
CHLOROPREN
NITRIL
EPDM-SAN

Rubber expansion valves with flange connection

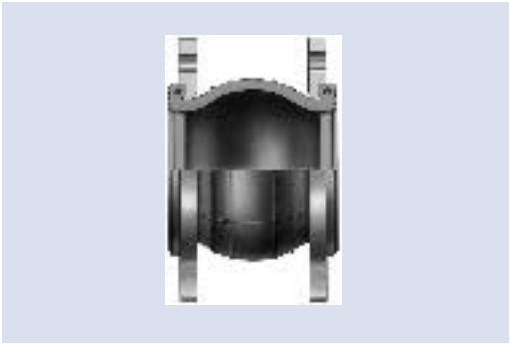

Rubber expansion joint
Bellows inner ply[1)], nylon cord reinforcement, loose flanges on both sides made of mild steel, zinc-plated
Type BKT-3140 00S-B –. . .[1)]
(old: 303/441) DN . . . . , PN . . .

[1)] EPDM

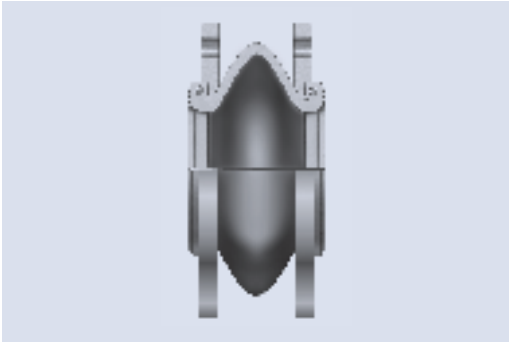

Rubber expansion joint
Bellows inner ply[1)], aramide reinforcement, loose flange on both sides made of mild steel, zinc plated, TÜV tested to DIN 4809
Type BKT-3140 00S-S –. . .[1)]
DN . . . . , PN . . .

[1)] EPDMT

Rubber expansion joint
Bellows inner ply[1)], nylon cord reinforcement, loose flanges on both sides made of mild steel, zinc-plated
Type BKT-3140 00S-A –. . .[1)] (old: 313/441)
DN . . . . , PN . . .

[1)] EPDM
EPDMT
CHLOROPREN
NITRIL
HYPALON
EPDM-SAN

Rubber expansion joint
Bellows inner ply[1)], nylon cord reinforcement, loose flanges on both sides made of mild steel, zinc-plated
Type BKT-3140 00S-D –. . .[1)]
DN . . . . , PN . . .

[1)] EPDM
EPDMT
CHLOROPREN
NITRIL
HYPALON
EPDM-SAN

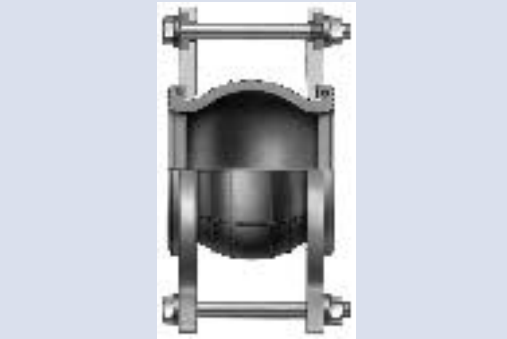

Rubber expansion joint
Bellows inner ply[1)], nylon cord reinforcement, loose flanges on both sides made of mild steel, zinc-plated, with noise-insulated supported tie-rod restraint made of mild steel, zinc-plated
Type BKT-3840 DFS-B –. . .[1)]
(old: 303/485)
DN . . . . , PN . . .

[1)] EPDM

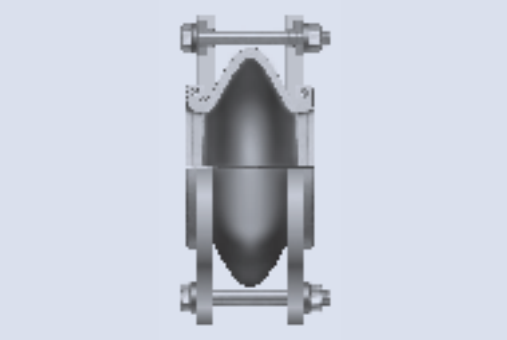

Rubber expansion joint
Bellows inner ply[1)], aramide reinforcement, loose flanges on both sides made of mild steel, zinc-plated, with noise-insulated supported tie-rod restraint made of mild steel, zinc-plated TÜV-tested to DIN 4809 **Type BKT-3840 DFS-S –. . .[1)]**
DN . . . . , PN . . .

[1)] EPDMT

Rubber expansion joint
Bellows inner ply[1)], nylon cord reinforcement, loose flanges on both sides made of mild steel, zinc-plated, with noise-insulated supported tie-rod restraint made of mild steel, zinc-plated
Type BKT-3840 DFS-A –. . .[1)]
(old: 313/485)
DN . . . . , PN . . .

[1)] EPDM
EPDMT
CHLOROPREN
NITRIL
HYPALON
EPDM-SAN

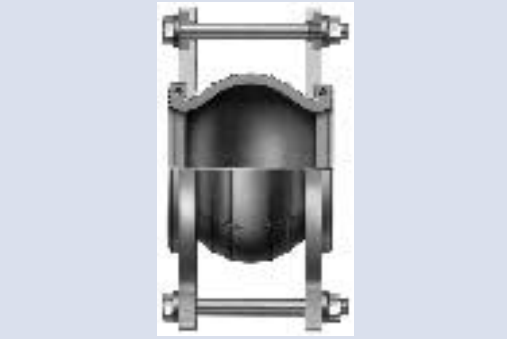

Rubber expansion joint
Bellows inner ply[1)], nylon cord reinforcement, loose flanges on both sides made of mild steel, zinc-plated, with noise-insulated supported tie-rod restraint made of mild steel, zinc-plated
Type BKT-3840 DFS-D –. . .[1)]
DN . . . . , PN . . .

[1)] EPDM
EPDMT
CHLOROPREN
NITRIL
HYPALON
EPDM-SAN

Rubber/metal pipe joint
Rubber body made of EPDM with vulcanised steel flanges made of
St 37-2
suitable for noise reduction
Type IGMV
DN . . . . , PN . . .

Rubber expansion joints

Materials

The bellows of the rubber expansion joints are made of elastomers – inner and outer layer – with several continuous nylon cord mesh inlays.

The nylon cord fabric inlays ensure high strength and resistance to the internal pressure and vacuum.

The rubber expansion joints with bellows types **A, B, D + S** can be fitted with loose flanges, bellows types **A, B + D** can also be fitted with threaded sockets. In the type with loose flanges, the toric rims of the bellows, reinforced by steel inlays, act as a gasket.

Type A (313)

Type D (323)

Type S (333)

Bellows A (313) + Bellows D (323)

Colour marking	Fluid*)	Structure	Material
black (dot)	– hot and cold water – water with low chemical additives	Inner ply	Chloroprene
		Reinforcement	Nylon cord
		Outer ply	Chloroprene
red (circle)	– Hot water Type test to DIN 4809	Inner ply	EPDMT
		Reinforcement	Nylon cord Spec.
		Outer ply	EPDMT
red (dot)	– Acidic water – Wastewater – Hot water	Inner ply	EPDM
		Reinforcement	Nylon cord
		Outer ply	EPDM
yellow/white (dot)	– Oils – Fuels – Gases	Inner ply	Nitrile
		Reinforcement	Nylon cord
		Outer ply	Chloroprene
red/blue (dot)	– Drinking water – Cold water	Inner ply	EPDM-SAN
		Reinforcement	Nylon cord
		Outer ply	EPDM-SAN
green (dot)	– Chemicals	Inner ply	Hypalon
		Reinforcement	Nylon cord
		Outer ply	Chloroprene

*) Basic recommendation, in case of doubt refer to the list of resistances.

Bellows S (333)

Colour marking	Fluid	Structure	Material
red (circle)	– Hot water Type test to DIN 4809	Inner ply	EPDMT
		Reinforcement	ARAMID
		Outer ply	EPDM

Bellows B (303)

Colour marking	Fluid*)	Structure	Material
brown	– universell	Inner ply	PTFE
		Reinforcement	Nylon cord
		Outer ply	Chloroprene
red	– Acidic water – Wastewater – Hot water	Inner ply	EPDM
		Reinforcement	Nylon cord
		Outer ply	EPDM

*) Basic recommendation, in case of doubt refer to the list of resistances.

Type B (303)

Rubber / metal pipe joint – IGMV –

	Fluid*)	Structure	Material
	– Hot water Type test, TÜV Southern Germany – Hot and cold water	Rubber body	EPDM
		Steel flanges, vulcanised	St 37-2

Type IGMV

Threaded sockets

made of GGG 40 – zinc-plated

Flanges

made of carbon steel, zinc-plated, connection dimensions to DIN EN 1092-1 with threaded holes.
Other materials and dimensions available on request.

Restraint

Hexagon bolts or threaded rods and clamping nuts made of mild steel, galvanised.

The expansions (movements) listed in the table are **either** axial **or** lateral **or** angular movement capacity.

If combined movements occur (e.g. axial and lateral), the sum of the percentage individual shares of the movements **must not exceed** 100 %.

The following movement capacities are allowed in combination:

– Δ_{ax} drawn with lateral or
– Δ_{ax} drawn with angular movement.

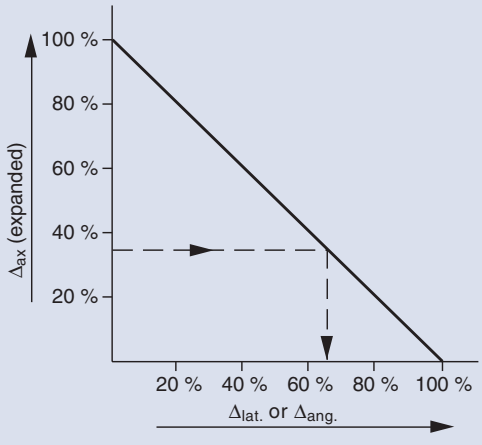

Example:

Type BKT-3140 00S-A –. . ., DN 200
Δ_{ax} = 7 mm drawn $\triangleq$ 35 %
allowable lateral proportion therefore
65 % $\triangleq$ Δ lat = ± 9.75 mm

Metal hoses

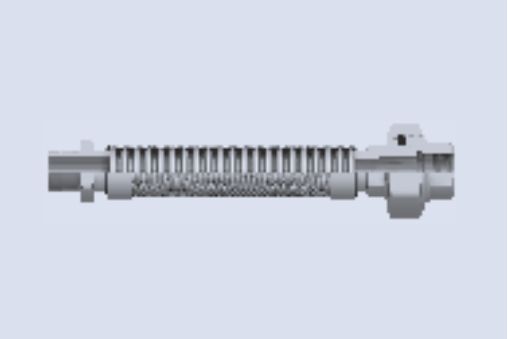

Metal hose assembly
Corrugated metal hose made of 1.4541,
Braid made of 1.4301
Annularly corrugated hose assembly
SP 10
DN . . . . , PN . . .

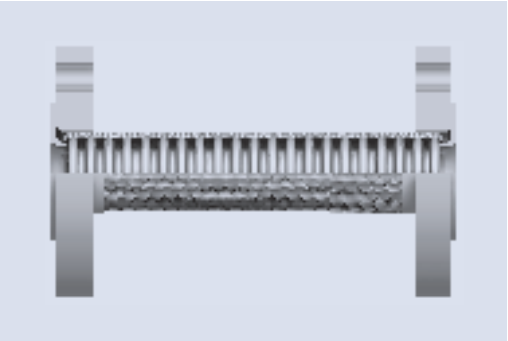

Metal hose assembly
Corrugated metal hose made of 1.4541,
Braid made of 1.4301
Annularly corrugated hose assembly
SP 20
DN . . . . , PN . . .

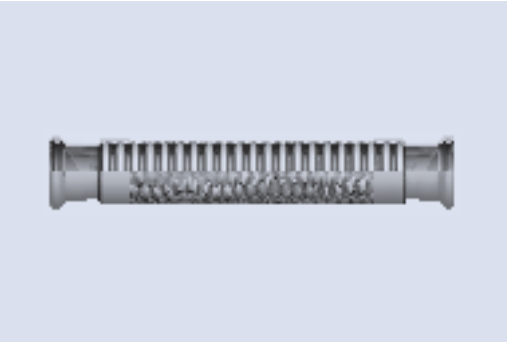

Metal hose assembly
Corrugated metal hose made of 1.4541,
Braid made of 1.4301
Annularly corrugated hose assembly,
mapress
DN . . . . , PN . . .

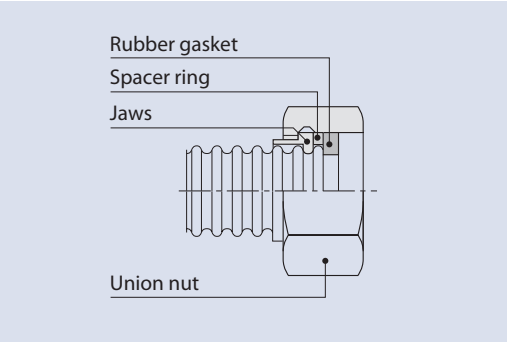

Pliable annularly corrugated tubing
Pliable tubing made of 1.4571,
Inserts made of 1.4305
Spacer ring made of 1.4301
Union nut made of brass
Gasket made of EPDM
Pliable annularly corrugated tubing
“MITUBE”
DN . . . . , PN . . .
incl. “MITUBE” connection kit

Type BKT-7110 000
old designation 307/210

Type BKT-7110 00S-KW

Type BKT-7110 000 and BKT-7110 00S-KW
Axial steel expansion joint with weld ends for axial or lateral movement capacity or for removing vibrations.

Materials – Type BKT-7110 000
Bellows: Stainless steel,
up to DN 50 – Material type 1.4571
from DN 65 – Material type 1.4541
Weld ends: mild steel

Materials – Type BKT-7110 00S-KW
Bellows: Stainless steel,
up to DN 50 – Material type 1.4571
from DN 65 – Material type 1.4541
Weld ends: 1.4571

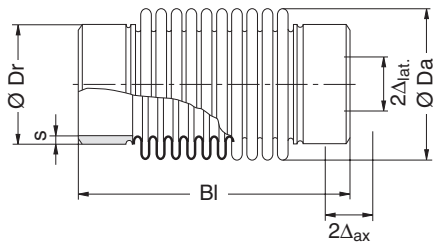

DN	PN	Nominal movement capacity[1]			Overall length	Weight	Weld end		Bellows				7110 000	7110 00S-KW
											Spring characteristic[1]			
		axial	lateral	All-round vibration					Outer diameter	Effective cross-section area				
		± Δ_{ax}	± Δ_{lat}	±	Bl.		Ø Dr	s	Ø Da	A_B	$C_{ax.}$	$C_{lat.}$	Item no.	Item no.
		[mm]	[mm]	[mm]	[mm]	[kg]	[mm]	[mm]	[mm]	[cm²]	[N/mm]	[N/mm]		
15	10	13	7	0.5	140	0.2	21.3	2.3	35	6.4	43	14	5142 0100	5142 2138
	10	18	13	0.9	152	0.2	21.3	2.3	34	6.0	52	11	5142 0101	5142 2139
	16	10	4	0.3	126	0.2	21.3	2.3	35	6.4	57	33	5142 0144	5142 2184
	16	15	9	0.6	140	0.2	21.3	2.3	34	6.0	63	19	5142 0145	5142 2185
	25	10	4	0.3	122	0.2	21.3	2.3	34	6.0	94	59	5142 0161	5142 2201
	40	7	2	0.2	112	0.2	21.3	2.3	34	6.0	135	146	5142 0160	5142 2200
20	10	13	7	0.5	140	0.2	26.9	2.3	35	6.4	43	14	5142 0102	5142 2140
	10	18	13	0.9	152	0.2	26.9	2.3	34	6.0	52	11	5142 0103	5142 2141
	16	10	4	0.3	126	0.2	26.9	2.3	35	6.4	57	33	5142 0146	5142 2186
	16	15	9	0.6	140	0.2	26.9	2.3	34	6.0	63	19	5142 0147	5142 2187
	25	10	4	0.3	122	0.2	26.9	2.3	34	6.0	94	59	5142 0163	5142 2203
	40	7	2	0.2	112	0.2	26.9	2.3	34	6.0	135	146	5142 0162	5142 2202
25	10	14	7	0.5	150	0.3	33.7	2.6	42	9.4	89	33	5142 0104	5142 2142
	10	19	10	0.7	148	0.3	33.7	2.6	41	9.1	54	20	5142 0105	5142 2143
	16	10	4	0.3	134	0.2	33.7	2.6	42	9.4	118	73	5142 0148	5142 2188
	16	14	10	0.7	162	0.4	33.7	2.6	41	8.8	151	37	5142 0149	5142 2189
	25	7	2	0.2	124	0.2	33.7	2.6	42	9.4	148	138	5142 0180	5142 2220
	25	12	7	0.5	152	0.3	33.7	2.6	41	8.8	171	54	5142 0164	5142 2204
	40	9	5	0.4	138	0.3	33.7	2.6	41	8.8	214	104	5142 0183	5142 2402
32	10	15	8	0.6	162	0.4	42.4	2.6	51	15.0	84	36	5142 0106	5142 2144
	10	20	15	1.1	186	0.5	42.4	2.6	51	14.2	121	29	5142 0107	5142 2145
	16	11	4	0.3	142	0.3	42.4	2.6	51	15.0	112	85	5142 0150	5142 2190
	16	17	10	0.7	170	0.5	42.4	2.6	51	14.2	142	47	5142 0151	5142 2191
	25	8	2	0.2	128	0.3	42.4	2.6	51	15.0	153	193	5142 0165	5142 2205
	25	14	7	0.5	156	0.4	42.4	2.6	51	14.2	172	80	5142 0166	5142 2206
	40	10	3	0.3	136	0.4	42.4	2.6	51	14.2	241	207	5142 0184	5142 2403
40	10	15	8	0.6	168	0.4	48.3	2.6	58	19.5	90	44	5142 0108	5142 2146
	10	22	16	1.1	198	0.7	48.3	2.6	57	18.5	125	32	5142 0109	5142 2147
	16	11	4	0.3	146	0.4	48.3	2.6	58	19.5	120	105	5142 0152	5142 2192
	16	18	11	0.8	182	0.6	48.3	2.6	57	18.5	145	50	5142 0153	5142 2193
	25	9	2	0.2	134	0.3	48.3	2.6	58	19.5	150	196	5142 0167	5142 2207
	25	14	7	0.5	160	0.5	48.3	2.6	57	18.5	187	104	5142 0168	5142 2208
	40	11	4	0.3	144	0.5	48.3	2.6	57	18.5	238	206	5142 0185	5142 2404
50	10	20	9	0.6	180	0.7	60.3	2.9	74	31.8	99	62	5142 0110	5142 2148
	10	25	14	1.0	196	0.9	60.3	2.9	74	31.1	105	47	5142 0111	5142 2149
	16	15	5	0.4	156	0.6	60.3	2.9	74	31.8	132	142	5142 0154	5142 2194
	16	24	15	1.1	206	1.2	60.3	2.9	73	30.1	173	63	5142 0155	5142 2195
	25	12	4	0.3	156	0.7	60.3	2.9	74	31.6	228	243	5142 0169	5142 2209
	25	19	9	0.6	180	1.0	60.3	2.9	73	30.1	219	126	5142 0170	5142 2210
	40	14	5	0.4	156	0.8	60.3	2.9	73	30.1	299	298	5142 0186	5142 2405
65	6	27	13	0.9	230	1.1	76.1	2.9	94	52.7	78	47	5142 0113	5142 2151
	6	35	19	1.3	246	1.4	76.1	2.9	94	51.7	84	40	5142 0114	5142 2152
	10	15	3	0.3	166	0.7	76.1	2.9	94	53.1	90	214	5142 0112	5142 2150
	10	28	15	1.1	244	1.7	76.1	2.9	93	51.1	161	77	5142 0128	5142 2168
	16	12	2	0.2	164	0.8	76.1	2.9	94	52.7	172	434	5142 0137	5142 2177
	16	22	10	0.7	226	1.2	76.1	2.9	94	52.4	133	86	5142 0127	5142 2167
	16	27	17	1.2	268	2.2	76.1	2.9	93	49.4	258	87	5142 0156	5142 2196
	25	17	8	0.6	228	1.4	76.1	2.9	94	51.7	310	192	5142 0172	5142 2212
	25	23	13	0.9	250	2.1	76.1	2.9	93	49.4	287	121	5142 0173	5142 2213
	40	7	1	0.1	166	0.9	76.1	2.9	94	51.7	688	1602	5142 0171	5142 2211
	40	16	6	0.5	210	1.6	76.1	2.9	93	49.4	398	313	5142 0187	5142 2406

[1] These figures are either axial or lateral or are vibrations
Deviation ± 30 %

Subject to change without notice[2]

Reduction factors[1] ffor pressure [K_p] and movement capacity [K_Δ]		
Temperature °C	K_p –	K_Δ –
–10 … 20	1.00	1.00
50	0.92	0.97
100	0.87	0.94
150	0.83	0.92
200	0.79	0.90
250	0.74	0.88
300	0.67	0.86
350	0.60	0.85
400	0.53	0.84

[3] Intermediate values can be linearly interpolated.

If the expansion joints Type BKT-7110 00S-KW are used for applications to DIN 1988, the movement capacities given in the tables must be reduced as follows:
PN 6 / PN 10 / PN 16 by 40 %,
PN 25 / PN 40 by 50 %

The expansion joints (up to PN 16) are tested by the DVGW to DIN 30 681 and are approved for gas plants. Marking with the relevant DIN DVGW Reg. No. possible for an additional charge.

Axial expansion joints

Type BKT-7110 000
old designation 307/210

Type BKT-7110 00S-KW

Type BKT-7110 000 and BKT-7110 00S-KW
Axial steel expansion joint with weld ends for axial or lateral movement capacity or for removing vibrations.

Materials – Type BKT-7110 000
Bellows: Stainless steel, Material type 1.4541
Weld ends: mild steel

Materials – Type BKT-7110 00S-KW
Bellows: Stainless steel, Material type 1.4541
Weld ends: 1.4571

BOA Group

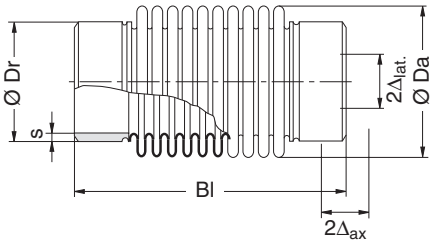

DN	PN	Nominal movement capacity[1] axial ± Δ_{ax} [mm]	lateral ± Δ_{lat} [mm]	All-round vibration ± [mm]	Overall length Bl. [mm]	Weight [kg]	Weld end Ø Dr [mm]	Weld end s [mm]	Bellows Outer diameter Ø Da [mm]	Bellows Effective cross-section area A_B [cm²]	Spring characteristic[2] $C_{ax.}$ [N/mm]	Spring characteristic[2] $C_{lat.}$ [N/mm]	7110 000 Item no.	7110 00S-KW Item no.
80	6	28	12	0.8	230	1.3	88.9	3.2	105	67.9	85	67	5142 0116	5142 2154
	6	35	17	1.2	246	1.7	88.9	3.2	105	66.7	91	56	5142 0117	5142 2155
	10	15	3	0.2	166	0.9	88.9	3.2	105	68.2	98	301	5142 0115	5142 2153
	10	28	13	0.9	244	2.0	88.9	3.2	105	66.0	175	109	5142 0130	5142 2170
	16	12	2	0.2	164	1.0	88.9	3.2	105	67.9	188	614	5142 0138	5142 2178
	16	23	9	0.7	228	1.5	88.9	3.2	105	67.5	146	118	5142 0129	5142 2169
	16	27	15	1.1	268	2.6	88.9	3.2	104	64.1	278	122	5142 0157	5142 2197
	25	17	7	0.5	228	1.7	88.9	3.2	105	66.7	342	274	5142 0175	5142 2215
	25	23	12	0.8	250	2.4	88.9	3.2	104	64.1	308	170	5142 0181	5142 2221
	40	7	1	0.1	166	1.2	88.9	3.2	105	66.7	760	2291	5142 0174	5142 2214
	40	16	6	0.4	210	2.0	88.9	3.2	104	64.1	427	438	5142 0188	5142 2407
100	6	38	16	1.1	268	2.3	114.3	3.6	136	115.0	90	72	5142 0119	5142 2159
	6	46	23	1.6	292	3.2	114.3	3.6	136	113.0	111	66	5142 0120	5142 2160
	10	20	4	0.3	188	1.5	114.3	3.6	136	115.0	119	348	5142 0118	5142 2158
	10	28	12	0.9	270	2.7	114.3	3.6	136	114.0	216	167	5142 0131	5142 2171
	10	38	19	1.3	292	3.6	114.3	3.6	136	112.0	187	111	5142 0132	5142 2172
	16	36	20	1.4	314	4.9	114.3	3.6	135	109.0	300	138	5142 0140	5142 2180
	25	12	2	0.2	184	1.8	114.3	3.6	136	114.0	479	1520	5142 0139	5142 2179
	25	23	10	0.7	272	3.2	114.3	3.6	136	113.0	415	311	5142 0158	5142 2198
	25	28	13	0.9	272	4.1	114.3	3.6	135	109.0	375	267	5142 0176	5142 2216
	40	10	2	0.2	186	2.0	114.3	3.6	136	113.0	922	2768	5142 0189	5142 2408
	40	20	6	0.5	228	3.4	114.3	3.6	135	109.0	500	643	5142 0190	5142 2409
125	6	38	14	1.0	270	2.9	139.7	4.0	158	159.0	103	112	5142 0122	5142 2162
	6	46	19	1.4	292	4.0	139.7	4.0	158	157.0	125	104	5142 0123	5142 2163
	10	20	3	0.3	188	2.0	139.7	4.0	158	160.0	135	548	5142 0121	5142 2161
	10	38	16	1.1	292	4.5	139.7	4.0	157	155.0	212	175	5142 0134	5142 2174
	16	28	10	0.7	270	3.4	139.7	4.0	158	158.0	246	265	5142 0133	5142 2173
	16	36	17	1.2	314	6.0	139.7	4.0	157	152.0	336	217	5142 0142	5142 2182
	25	12	2	0.2	184	2.3	139.7	4.0	158	158.0	546	2410	5142 0141	5142 2181
	25	23	9	0.6	272	4.0	139.7	4.0	158	157.0	476	497	5142 0177	5142 2217
	25	31	13	0.9	290	5.5	139.7	4.0	157	152.0	373	306	5142 0178	5142 2218
	40	10	2	0.1	186	2.5	139.7	4.0	158	157.0	1057	4418	5142 0191	5142 2410
	40	21	6	0.5	238	4.4	139.7	4.0	157	152.0	517	804	5142 0192	5142 2411
150	6	38	12	0.8	270	3.7	168.3	4.5	186	228.0	119	185	5142 0125	5142 2165
	6	46	16	1.2	292	5.0	168.3	4.5	186	225.0	143	172	5142 0126	5142 2166
	10	20	3	0.2	188	2.6	168.3	4.5	186	228.0	155	903	5142 0124	5142 2164
	10	38	14	1.0	292	5.6	168.3	4.5	186	224.0	243	289	5142 0136	5142 2176
	16	29	9	0.6	270	4.3	168.3	4.5	186	226.0	285	440	5142 0135	5142 2175
	16	36	15	1.1	314	7.4	168.3	4.5	185	219.0	381	357	5142 0159	5142 2199
	25	12	2	0.1	184	3.0	168.3	4.5	186	226.0	632	4002	5142 0143	5142 2183
	25	23	7	0.5	272	5.0	168.3	4.5	186	225.0	554	831	5142 0179	5142 2219
	25	31	11	0.8	290	6.9	168.3	4.5	185	219.0	424	503	5142 0182	5142 2401
	40	10	1	0.1	186	3.3	168.3	4.5	186	225.0	1230	7389	5142 0193	5142 2412
	40	21	5	0.4	238	5.5	168.3	4.5	185	219.0	587	1319	5142 0194	5142 2413

[1] These figures are either axial or lateral or are vibrations
[2] Deviation ± 30 %

Subject to change without notice

Reduction factors[3] for pressure [K_p] and movement capacity [K_Δ]		
Temperature °C	K_p –	K_Δ –
–10 … 20	1.00	1.00
50	0.92	0.97
100	0.87	0.94
150	0.83	0.92
200	0.79	0.90
250	0.74	0.88
300	0.67	0.86
350	0.60	0.85
400	0.53	0.84

[3] Intermediate values can be linearly interpolated.

If the expansion joints Type BKT-7110 00S-KW are used for applications to DIN 1988, the movement capacities given in the tables must be reduced as follows:
PN 6 / PN 10 / PN 16 by 40 %,
PN 25 / PN 40 by 50 %

The expansion joints (up to PN 16) are tested by the DVGW to DIN 30 681 and are approved for gas plants. Marking with the relevant DIN DVGW Reg. No. possible for an additional charge.

Type BKT-7119 00X and BKT-7119 00S-KW

Axial steel expansion joint, **suitable for Δ_{ax} without prestressing during installation**, with weld ends, inner sleeve and protective tube.

Materials – Type BKT-7119 00X

Bellows: Stainless steel,
up to DN 50 – Material type 1.4571
from DN 65 – Material type 1.4541
Weld ends: mild steel,
Inner sleeve and protective tube: carbon steel

Materials – Type BKT-7119 00S-KW

Bellows: Stainless steel, material type 1.4571
weld ends: 1.4571,
inner sleeve and protective tube: 1.4571 or 1.4404

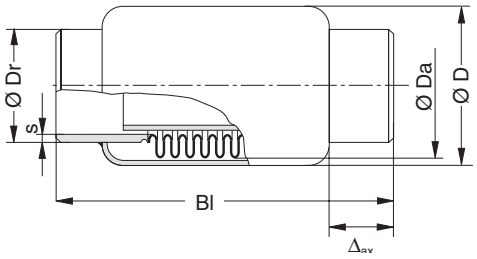

DN	PN	Nominal axial movement capacity Δ_{ax}	Overall length Bl.	Outer diameter Ø D	Weight	Weld end		Bellows			7119 00X	7119 00S-KW
						Ø Dr	s	Outer diameter Ø Da	Effective cross-section area A_B	Axial Spring characteristic[1] $C_{ax.}$	Item no.	Item no.
		[mm]	[mm]	[mm]	[kg]	[mm]	[mm]	[mm]	[cm²]	[N/mm]		
15	10	74	420	38	0.9	21.3	2.3	34	6.3	14	5142 0866	
	16	25	220	38	0.5	21.3	2.3	35	6.4	43	5142 0864	5142 2534
	16	48	335	38	0.7	21.3	2.3	35	6.4	22	5142 0865	5142 2535
	16	74	440	38	1.0	21.3	2.3	34	6.0	24	5142 0882	
	25	20	200	38	0.5	21.3	2.3	34	6.0	94	5142 0896	
	25	38	290	38	0.7	21.3	2.3	34	6.0	47	5142 0897	
	25	57	390	38	0.9	21.3	2.3	34	6.0	31	5142 0898	
20	10	74	410	38	0.9	26.9	2.3	34	6.3	14	5142 0869	
	16	25	210	38	0.5	26.9	2.3	35	6.4	43	5142 0867	5142 2537
	16	48	325	38	0.7	26.9	2.3	35	6.4	22	5142 0868	5142 2538
	16	74	430	38	1.0	26.9	2.3	34	6.0	24	5142 0883	
	25	20	190	38	0.5	26.9	2.3	34	6.0	94	5142 0899	
	25	38	280	38	0.7	26.9	2.3	34	6.0	47	5142 0900	
	25	57	380	38	0.9	26.9	2.3	34	6.0	31	5142 0901	
25	10	32	235	45	0.7	33.7	2.6	42	9.6	38	5142 0870	5142 2540
	10	60	385	45	1.1	33.7	2.6	42	9.6	19	5142 0871	5142 2541
	10	90	485	45	1.4	33.7	2.6	42	9.4	12	5142 0872	5142 2542
	16	72	420	45	1.3	33.7	2.6	41	9.1	27	5142 0886	5142 2556
	25	28	235	45	0.7	33.7	2.6	42	9.4	89	5142 0884	5142 2554
	25	50	380	45	1.2	33.7	2.6	42	9.4	44	5142 0885	5142 2555
	25	64	440	45	1.5	33.7	2.6	41	8.8	64	5142 0902	
32	10	38	265	56	1.1	42.4	2.6	51	15.2	36	5142 0873	5142 2543
	10	70	430	56	1.8	42.4	2.6	51	15.2	18	5142 0874	5142 2544
	10	106	555	56	2.3	42.4	2.6	51	15.0	12	5142 0875	
	16	74	455	56	2.1	42.4	2.6	51	14.7	37	5142 0889	
	25	28	260	56	1.1	42.4	2.6	51	15.0	84	5142 0887	5142 2557
	25	52	420	56	1.9	42.4	2.6	51	15.0	42	5142 0888	5142 2558
	25	74	480	56	2.4	42.4	2.6	51	14.2	60	5142 0903	
40	10	39	270	62	1.3	48.3	2.6	58	19.7	38	5142 0876	5142 2546
	10	72	440	62	2.1	48.3	2.6	58	19.7	19	5142 0877	5142 2547
	10	108	570	62	2.7	48.3	2.6	58	19.5	13	5142 0878	5142 2548
	16	75	510	62	2.7	48.3	2.6	57	19.1	40	5142 0892	5142 2562
	25	29	260	62	1.4	48.3	2.6	58	19.5	90	5142 0890	5142 2560
	25	53	425	62	2.2	48.3	2.6	58	19.5	45	5142 0891	5142 2561
	25	75	535	62	2.9	48.3	2.6	57	18.5	65	5142 0904	
50	10	48	310	80	2.2	60.3	2.9	74	32.0	52	5142 0879	5142 2549
	10	88	530	80	3.7	60.3	2.9	74	32.0	26	5142 0880	5142 2550
	10	120	635	80	4.6	60.3	2.9	74	31.6	23	5142 0881	5142 2551
	16	38	305	80	2.3	60.3	2.9	74	31.8	99	5142 0893	5142 2563
	16	72	465	80	3.5	60.3	2.9	74	31.8	50	5142 0894	5142 2564
	16	120	660	80	5.1	60.3	2.9	74	30.9	36	5142 0895	5142 2565
	25	32	305	80	2.3	60.3	2.9	74	31.6	171	5142 0905	
	25	60	460	80	3.6	60.3	2.9	74	31.6	85	5142 0906	
	25	92	600	80	5.2	60.3	2.9	73	30.1	82	5142 0907	

[1] Deviation ± 30 %

Subject to change without notice

If the expansion joints Type BKT-7119 00S-KW are used for applications to DIN 1988, the movement capacities given in the tables must be reduced as follows:
PN 10 / PN 16 by 40 %,
PN 25 by 50 %

The expansion joints (up to PN 16) are tested by the DVGW to DIN 30 681 and are approved for gas plants. Marking with the relevant DIN DVGW Reg. No. possible for an additional charge.

Type BKT-7119 00X
old designation 307/224

Type BKT-7119 00S-KW

Reduction factors[2] for pressure [K_p] and movement capacity [K_Δ]		
Temperature °C	K_p –	K_Δ –
–10 … 20	1.00	1.00
50	0.92	0.97
100	0.87	0.94
150	0.83	0.92
200	0.79	0.90
250	0.74	0.88
300	0.67	0.86
350	0.60	0.85
400	0.53	0.84

[2] Intermediate values can be linearly interpolated.

Axial expansion joints

Type BKT-7119 00X
old designation
307/224

Type BKT-7119 00S-KW

Type BKT-7119 00X and BKT-7119 00S-KW
Axial steel expansion joint, **suitable for Δ_{ax} without prestressing during installation**, with weld ends, inner sleeve and protective tube.

BOA Group

Materials – Type BKT-7119 00X
Bellows: Stainless steel,
up to DN 50 – Material type 1.4571
from DN 65 – Material type 1.4541
Weld ends: mild steel,
Inner sleeve and protective tube: carbon steel

Materials – Type BKT-7119 00S-KW
Bellows: Stainless steel, Material type 1.4571
Weld ends: 1.4571,
Inner sleeve and protective tube: 1.4571 or 1.4404

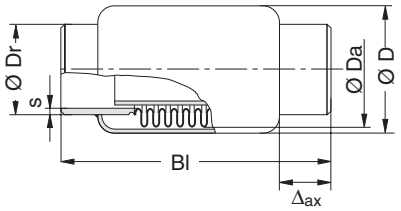

DN	PN	Nominal axial movement capacity Δ_{ax}	Overall length Bl.	Outer diameter Ø D	Weight	Weld end		Bellows			7119 00X	7119 00S-KW
						Ø Dr	s	Outer diameter Ø Da	Effective cross-section area A_B	Axial Spring characteristic[1] $C_{ax.}$	Item no.	Item no.
		[mm]	[mm]	[mm]	[kg]	[mm]	[mm]	[mm]	[cm²]	[N/mm]		
65	10	55	375	100	3.8	76.1	2.9	94	52.7	78	5142 0908	5142 3147
	10	100	640	100	6.4	76.1	2.9	94	52.7	39	5142 0909	5142 3148
	10	165	840	100	8.2	76.1	2.9	94	52.4	18	5142 0910	5142 3149
	16	44	350	100	3.7	76.1	2.9	94	52.4	133	5142 0923	5142 3162
	16	82	590	100	6.2	76.1	2.9	94	52.4	67	5142 0924	5142 3163
	16	120	730	100	8.6	76.1	2.9	93	50.4	67	5142 0925	
	25	35	345	100	3.9	76.1	2.9	94	51.7	310	5142 0938	
	25	64	540	100	6.2	76.1	2.9	94	51.7	155	5142 0939	
	25	98	710	100	9.2	76.1	2.9	93	49.4	129	5142 0940	
80	10	55	375	112	4.7	88.9	3.2	105	67.9	85	5142 0911	5142 3150
	10	100	640	112	7.6	88.9	3.2	105	67.9	42	5142 0912	5142 3151
	10	165	840	112	10.0	88.9	3.2	105	67.5	20	5142 0913	5142 3152
	16	46	350	112	4.5	88.9	3.2	105	67.5	146	5142 0926	5142 3165
	16	85	590	112	7.6	88.9	3.2	105	67.5	73	5142 0927	5142 3166
	16	120	730	112	11.0	88.9	3.2	104	65.2	71	5142 0928	5142 3167
	25	35	345	112	4.8	88.9	3.2	105	66.7	342	5142 0941	
	25	64	540	112	7.5	88.9	3.2	105	66.7	171	5142 0942	
	25	98	710	112	11.0	88.9	3.2	104	64.1	139	5142 0943	
100	10	75	475	144	8.4	114.3	3.6	136	115.0	90	5142 0914	5142 3153
	10	140	810	144	14.0	114.3	3.6	136	115.0	45	5142 0915	5142 3154
	10	200	1040	144	18.0	114.3	3.6	136	114.0	29	5142 0916	5142 3155
	16	57	405	144	7.6	114.3	3.6	136	114.0	216	5142 0929	5142 3168
	16	105	720	144	13.0	114.3	3.6	136	114.0	108	5142 0930	5142 3169
	16	160	950	144	20.0	114.3	3.6	135	110.0	87	5142 0931	5142 3170
	25	46	400	144	8.0	114.3	3.6	136	113.0	415	5142 0944	
	25	85	680	144	14.0	114.3	3.6	136	113.0	207	5142 0945	
	25	130	890	144	20.0	114.3	3.6	135	109.0	150	5142 0946	
125	10	75	475	168	13.0	139.7	4.0	158	159.0	103	5142 0917	5142 3156
	10	140	810	168	22.0	139.7	4.0	158	159.0	51	5142 0918	5142 3157
	10	200	1040	168	28.0	139.7	4.0	158	158.0	32	5142 0919	5142 3158
	16	57	405	168	13.0	139.7	4.0	158	158.0	246	5142 0932	5142 3171
	16	105	720	168	20.0	139.7	4.0	158	158.0	123	5142 0933	5142 3172
	16	160	950	168	29.0	139.7	4.0	157	154.0	98	5142 0934	5142 3173
	25	46	400	168	12.0	139.7	4.0	158	157.0	476	5142 0947	
	25	85	680	168	20.0	139.7	4.0	158	157.0	238	5142 0948	
	25	130	890	168	29.0	139.7	4.0	157	152.0	168	5142 0949	
150	10	75	475	197	16.0	168.3	4.5	186	228.0	119	5142 0920	5142 3159
	10	140	810	197	27.0	168.3	4.5	186	228.0	59	5142 0921	5142 3160
	10	200	1040	197	35.0	168.3	4.5	186	226.0	37	5142 0922	5142 3161
	16	58	405	197	14.0	168.3	4.5	186	226.0	285	5142 0935	5142 3174
	16	107	720	197	25.0	168.3	4.5	186	226.0	142	5142 0936	5142 3175
	16	160	950	197	36.0	168.3	4.5	185	222.0	111	5142 0937	5142 3176
	25	46	400	197	15.0	168.3	4.5	186	225.0	554	5142 0950	
	25	85	680	197	25.0	168.3	4.5	186	225.0	277	5142 0951	
	25	130	890	197	36.0	168.3	4.5	185	219.0	191	5142 0952	

[1] Deviation ± 30 %

Subject to change without notice

Reduction factors[2] for pressure [K_p] and movement capacity [K_Δ]		
Temperature °C	K_p –	K_Δ –
–10 … 20	1.00	1.00
50	0.92	0.97
100	0.87	0.94
150	0.83	0.92
200	0.79	0.90
250	0.74	0.88
300	0.67	0.86
350	0.60	0.85
400	0.53	0.84

[2] Intermediate values can be linearly interpolated.

If the expansion joints Type BKT-7119 00S-KW are used for applications to DIN 1988, the movement capacities given in the tables must be reduced as follows:
PN 10 / PN 16 by 40 %,
PN 25 by 50 %

The expansion joints (up to PN 16) are tested by the DVGW to DIN 30 681 and are approved for gas plants. Marking with the relevant DIN DVGW Reg. No. possible for an additional charge.

Type BKT-7120 000 and BKT-7120 00S-KW

Axial steel expansion joint with flanges for axial or lateral movement capacity or for removing vibrations.

Materials – Type BKT-7120 000

Bellows: Stainless steel,
up to DN 50 – Material type 1.4571
from DN 65 – Material type 1.4541
Weld ends: mild steel, flanges: carbon steel

Materials – Type BKT-7120 00S-KW

Bellows: Stainless steel,
up to DN 50 – Material type 1.4571
from DN 65 – Material type 1.4541
Weld ends: 1.4571, flanges: 1.4571

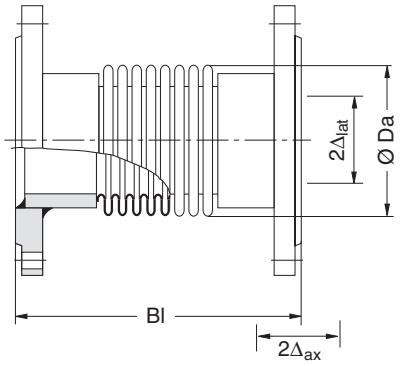

Type BKT-7120 000
old designation 307/211

Type BKT-7120 00S-KW

DN	PN	Nominal movement capacity[1] axial ± Δ_{ax} [mm]	lateral ± Δ_{lat} [mm]	All-round vibration ± [mm]	Overall length Bl. [mm]	Weight [kg]	Flange connection dimension	Bellows: Outer diameter Ø Da [mm]	Bellows: Effective cross-section area A_B [cm²]	Bellows: Spring characteristic[2] $C_{ax.}$ [N/mm]	Bellows: Spring characteristic[2] $C_{lat.}$ [N/mm]	7120 000 Item no.	7120 00S-KW Item no.
15	6	13	7	0.5	150	0.9	DIN EN 1092-1	35	6.4	43	14	5142 0195	5142 2891
	6	18	13	0.9	162	0.9		34	6.0	52	11	5142 0196	5142 2892
	10	13	7	0.5	150	1.4		35	6.4	43	14	5142 0222	5142 2893
	10	18	13	0.9	162	1.4		34	6.0	52	11	5142 0223	5142 2894
	16	10	4	0.3	136	1.4		35	6.4	57	33	5142 0249	5142 2895
	16	15	9	0.6	150	1.4		34	6.0	63	19	5142 0250	5142 2896
	25	10	4	0.3	132	1.6		34	6.0	94	59	5142 0273	5142 2897
	40	7	2	0.2	122	1.5		34	6.0	135	146	5142 0272	5142 2898
20	6	13	7	0.5	150	1.2		35	6.4	43	14	5142 0197	5142 2899
	6	18	13	0.9	162	1.3		34	6.0	52	11	5142 0198	5142 2900
	10	13	7	0.5	150	1.9		35	6.4	43	14	5142 0224	5142 2901
	10	18	13	0.9	162	1.9		34	6.0	52	11	5142 0225	5142 2902
	16	10	4	0.3	136	1.9		35	6.4	57	33	5142 0251	5142 2903
	16	15	9	0.6	150	1.9		34	6.0	63	19	5142 0252	5142 2904
	25	10	4	0.3	132	2.1		34	6.0	94	59	5142 0275	5142 2905
	40	7	2	0.2	122	2.1		34	6.0	135	146	5142 0274	5142 2906
25	6	14	7	0.5	160	1.6		42	9.4	89	33	5142 0199	5142 2907
	6	19	10	0.7	158	1.6		41	9.1	54	20	5142 0200	5142 2908
	10	14	7	0.5	160	2.3		42	9.4	89	33	5142 0226	5142 2909
	10	19	10	0.7	158	2.3		41	9.1	54	20	5142 0227	5142 2910
	16	10	4	0.3	144	2.3		42	9.4	118	73	5142 0253	5142 2911
	16	14	10	0.7	172	2.4		41	8.8	151	37	5142 0254	5142 2912
	25	7	2	0.2	134	2.5		42	9.4	148	138	5142 0276	5142 2913
	25	12	7	0.5	162	2.7		41	8.8	171	54	5142 0277	5142 2914
	40	9	5	0.4	148	2.6		41	8.8	214	104	5142 0299	5142 2915
32	6	15	8	0.6	172	2.2		51	15.0	84	36	5142 0201	5142 2916
	6	20	15	1.1	196	2.4		51	14.2	121	29	5142 0202	5142 2917
	10	15	8	0.6	172	3.3		51	15.0	84	36	5142 0228	5142 2918
	10	20	15	1.1	196	3.5		51	14.2	121	29	5142 0229	5142 2919
	16	11	4	0.3	152	3.3		51	15.0	112	85	5142 0255	5142 2920
	16	17	10	0.7	180	3.5		51	14.2	142	47	5142 0256	5142 2921
	25	8	2	0.2	138	3.7		51	15.0	153	193	5142 0278	5142 2922
	25	14	7	0.5	166	3.8		51	14.2	172	80	5142 0279	5142 2923
	40	10	3	0.3	146	3.7		51	14.2	241	207	5142 0300	5142 2924
40	6	15	8	0.6	178	2.4		58	19.5	90	44	5142 0203	5142 2925
	6	22	16	1.1	208	2.7		57	18.5	125	32	5142 0204	5142 2926
	10	15	8	0.6	178	3.6		58	19.5	90	44	5142 0230	5142 2927
	10	22	16	1.1	208	3.9		57	18.5	125	32	5142 0231	5142 2928
	16	11	4	0.3	156	3.6		58	19.5	120	105	5142 0257	5142 2929
	16	18	11	0.8	192	3.8		57	18.5	145	50	5142 0258	5142 2930
	25	9	2	0.2	144	4.0		58	19.5	150	196	5142 0280	5142 2931
	25	14	7	0.5	170	4.2		57	18.5	187	104	5142 0281	5142 2932
	40	11	4	0.3	154	4.2		57	18.5	238	206	5142 0301	5142 2933

[1] These figures are either axial or lateral or are vibrations
[2] Deviation ± 30 %

Subject to change without notice

Reduction factors[3] for pressure [K_p] and movement capacity [K_Δ]		
Temperature °C	K_p –	K_Δ –
–10 … 20	1.00	1.00
50	0.92	0.97
100	0.87	0.94
150	0.83	0.92
200	0.79	0.90
250	0.74	0.88
300	0.67	0.86
350	0.60	0.85
400	0.53	0.84

[3] Intermediate values can be linearly interpolated.

If the expansion joints Type BKT-7120 00S-KW are used for applications to DIN 1988, the movement capacities given in the tables must be reduced as follows:
PN 6 / PN 10 / PN 16 by 40 %,
PN 25 / PN 40 by 50 %

The expansion joints (up to PN 16) are tested by the DVGW to DIN 30 681 and are approved for gas plants. Marking with the relevant DIN DVGW Reg. No. possible for an additional charge.

Axial expansion joints

Type BKT-7120 000
old designation 307/211

Type BKT-7120 00S-KW

Type BKT-7120 000 and BKT-7120 00S-KW
Axial steel expansion joint with flanges for axial or lateral movement capacity or for removing vibrations.

Materials – Type BKT-7120 000
Bellows: Stainless steel,
up to DN 50 – Material type 1.4571
from DN 65 – Material type 1.4541
Weld ends: carbon steel, flanges: carbon steel

Materials – Type BKT-7120 00S-KW
Bellows: Stainless steel,
up to DN 50 – Material type 1.4571
from DN 65 – Material type 1.4541
Weld ends: 1.4571, flanges: 1.4571

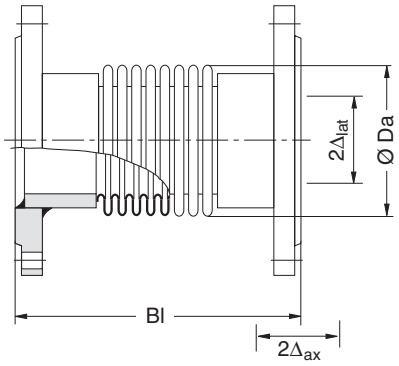

DN	PN	Nominal movement capacity[1] axial ± Δ_{ax} [mm]	lateral ± Δ_{lat} [mm]	All-round vibration ± [mm]	Overall length Bl. [mm]	Weight [kg]	Flange connection dimension	Bellows: Outer diameter Ø Da [mm]	Bellows: Effective cross-section area A_B [cm²]	Spring characteristic[2] $C_{ax.}$ [N/mm]	Spring characteristic[2] $C_{lat.}$ [N/mm]	7120 000 Item no.	7120 00S-KW Item no.
50	6	20	9	0.6	190	2.9	DIN EN 1092-1	74	31.8	99	62	5142 0205	5142 2934
	6	25	14	1.0	206	3.2		74	31.1	105	47	5142 0206	5142 2935
	10	20	9	0.6	190	5.1		74	31.8	99	62	5142 0232	5142 2936
	10	25	14	1.0	206	5.3		74	31.1	105	47	5142 0233	5142 2937
	16	15	5	0.4	166	5.0		74	31.8	132	142	5142 0259	5142 2938
	16	24	15	1.1	216	5.6		73	30.1	173	63	5142 0260	5142 2939
	25	12	4	0.3	166	5.6		74	31.6	228	243	5142 0282	5142 2940
	25	19	9	0.6	190	5.9		73	30.1	219	126	5142 0283	5142 2941
	40	14	5	0.4	166	5.8		73	30.1	299	298	5142 0302	5142 2942
65	6	15	3	0.3	176	3.5		94	53.1	90	214	5142 0207	5142 2943
	6	27	13	0.9	240	3.9		94	52.7	78	47	5142 0208	5142 2944
	6	35	19	1.3	256	4.2		94	51.7	84	40	5142 0209	5142 2945
	10	15	3	0.3	176	6.1		94	53.1	90	214	5142 0234	5142 2946
	10	28	15	1.1	254	7.0		93	51.1	161	77	5142 0236	5142 2947
	16	12	2	0.2	174	6.1		94	52.7	172	434	5142 0261	5142 2948
	16	22	10	0.7	236	6.6		94	52.4	133	86	5142 0235	5142 2949
	16	27	17	1.2	278	7.6		93	49.4	258	87	5142 0262	5142 2950
	25	17	8	0.6	238	7.8		94	51.7	310	192	5142 0285	5142 2951
	25	23	13	0.9	260	8.4		93	49.4	287	121	5142 0286	5142 2952
	40	7	1	0.1	176	7.3		94	51.7	688	1602	5142 0284	5142 2953
	40	16	6	0.5	220	8.0		93	49.4	398	313	5142 0303	5142 2954
80	6	15	3	0.2	176	5.5		105	68.2	98	301	5142 0210	5142 2955
	6	28	12	0.8	240	5.9		105	67.9	85	67	5142 0211	5142 2956
	6	35	17	1.2	256	6.3		105	66.7	91	56	5142 0212	5142 2957
	10	15	3	0.2	176	7.5		105	68.2	98	301	5142 0237	5142 2958
	10	28	13	0.9	254	8.6		105	66.0	175	109	5142 0239	5142 2959
	16	12	2	0.2	174	7.6		105	67.9	188	614	5142 0263	5142 2960
	16	23	9	0.7	238	8.0		105	67.5	146	118	5142 0238	5142 2961
	16	27	15	1.1	278	9.2		104	64.1	278	122	5142 0264	5142 2962
	25	17	7	0.5	238	10.0		105	66.7	342	274	5142 0288	5142 2963
	25	23	12	0.8	260	10.0		104	64.1	308	170	5142 0289	5142 2964
	40	7	1	0.1	176	9.0		105	66.7	760	2291	5142 0287	5142 2965
	40	16	6	0.4	220	10.0		104	64.1	427	438	5142 0304	5142 2966

[1] These figures are either axial or lateral or are vibrations
[2] Deviation ± 30 %

Subject to change without notice

Reduction factors[3] for pressure [K_p] and movement capacity [K_Δ]		
Temperature °C	K_p –	K_Δ –
–10 … 20	1.00	1.00
50	0.92	0.97
100	0.87	0.94
150	0.83	0.92
200	0.79	0.90
250	0.74	0.88
300	0.67	0.86
350	0.60	0.85
400	0.53	0.84

[3] Intermediate values can be linearly interpolated.

If the expansion joints Type BKT-7120 00S-KW are used for applications to DIN 1988, the movement capacities given in the tables must be reduced as follows:
PN 6 / PN 10 / PN 16 by 40 %,
PN 25 / PN 40 by 50 %

The expansion joints (up to PN 16) are tested by the DVGW to DIN 30 681 and are approved for gas plants. Marking with the relevant DIN DVGW Reg. No. possible for an additional charge.

Type BKT-7120 000 and BKT-7120 00S-KW

Axial steel expansion joint with flanges for axial or lateral movement capacity or for removing vibrations.

Materials – Type BKT-7120 000

Bellows: Stainless steel, material type 1.4541
Weld ends: carbon steel, flanges: carbon steel

Materials – Type BKT-7120 00S-KW

Bellows: Stainless steel, material type 1.4541
Weld ends: 1.4571, flanges: 1.4571

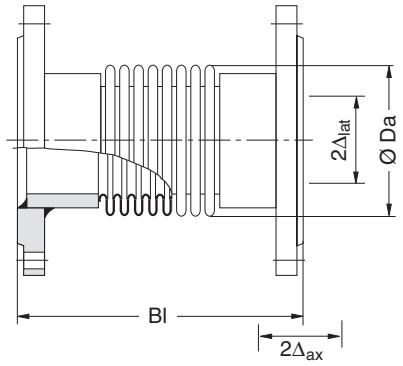

Type BKT-7120 000
old designation 307/211

Type BKT-7120 00S-KW

DN	PN	Nominae movement capacity[1] axial ± Δ_{ax}	lateral ± Δ_{lat}	All-round vibration ±	Overall length Bl.	Weight	Flange connection dimension	Bellows Outer diameter Ø Da	Effective cross-section area A_B	Spring characteristic[2] $C_{ax.}$	$C_{lat.}$	7120 000 Item no.	7120 00S-KW Item no.
		[mm]	[mm]	[mm]	[mm]	[kg]		[mm]	[cm²]	[N/mm]	[N/mm]		
100	6	20	4	0.3	198	6.5	DIN EN 1092-1	136	115.0	119	348	5142 0213	5142 2967
	6	38	16	1.1	278	7.4		136	115.0	90	72	5142 0214	5142 2968
	6	46	23	1.6	302	8.2		136	113.0	111	66	5142 0215	5142 2969
	10	20	4	0.3	198	9.0		136	115.0	119	348	5142 0240	5142 2970
	10	28	12	0.9	280	10.0		136	114.0	216	167	5142 0241	5142 2971
	10	38	19	1.3	302	11.0		136	112.0	187	111	5142 0242	5142 2972
	16	12	2	0.2	194	9.0		136	114.0	479	1520	5142 0265	5142 2973
	16	23	10	0.7	282	10.0		136	113.0	415	311	5142 0266	5142 2974
	16	36	20	1.4	324	12.0		135	109.0	300	138	5142 0267	5142 2975
	25	12	2	0.2	194	12.0		136	114.0	479	1520	5142 0290	5142 2976
	25	23	10	0.7	282	14.0		136	113.0	415	311	5142 0291	5142 2977
	25	28	13	0.9	282	14.0		135	109.0	375	267	5142 0292	5142 2978
	40	10	2	0.2	196	12.0		136	113.0	922	2768	5142 0305	5142 2979
	40	20	6	0.5	238	14.0		135	109.0	500	643	5142 0306	5142 2980
125	6	20	3	0.3	203	9.0		158	160.0	135	548	5142 0216	5142 2981
	6	38	14	1.0	285	10.0		158	159.0	103	112	5142 0217	5142 2982
	6	46	19	1.4	307	11.0		158	157.0	125	104	5142 0218	5142 2983
	10	20	3	0.3	203	12.0		158	160.0	135	548	5142 0243	5142 2984
	10	38	16	1.1	307	14.0		157	155.0	212	175	5142 0245	5142 2985
	16	12	2	0.2	199	12.0		158	158.0	546	2410	5142 0268	5142 2986
	16	28	10	0.7	285	13.0		158	158.0	246	265	5142 0244	5142 2987
	16	36	17	1.2	329	16.0		157	152.0	336	217	5142 0269	5142 2988
	25	12	2	0.2	199	16.0		158	158.0	546	2410	5142 0293	5142 2989
	25	23	9	0.6	287	18.0		158	157.0	476	497	5142 0294	5142 2990
	25	31	13	0.9	305	20.0		157	152.0	373	306	5142 0295	5142 2991
	40	10	2	0.1	201	17.0		158	157.0	1057	4418	5142 0307	5142 2992
	40	21	6	0.5	253	18.0		157	152.0	517	804	5142 0308	5142 2993
150	6	20	3	0.2	203	10.0		186	228.0	155	903	5142 0219	5142 2994
	6	38	12	0.8	285	11.0		186	228.0	119	185	5142 0220	5142 2995
	6	46	16	1.2	307	13.0		186	225.0	143	172	5142 0221	5142 2996
	10	20	3	0.2	203	15.0		186	228.0	155	903	5142 0246	5142 2997
	10	38	14	1.0	307	18.0		186	224.0	243	289	5142 0248	5142 2998
	16	12	2	0.1	199	15.0		186	226.0	632	4002	5142 0270	5142 2999
	16	29	9	0.6	285	16.0		186	226.0	285	440	5142 0247	5142 3000
	16	36	15	1.1	329	19.0		185	219.0	381	357	5142 0271	5142 3001
	25	12	2	0.1	199	21.0		186	226.0	632	4002	5142 0296	5142 3002
	25	23	7	0.5	287	23.0		186	225.0	554	831	5142 0297	5142 3003
	25	31	11	0.8	305	25.0		185	219.0	424	503	5142 0298	5142 3004
	40	10	1	0.1	201	21.0		186	225.0	1230	7389	5142 0309	5142 3005
	40	21	5	0.4	253	23.0		185	219.0	587	1319	5142 0310	5142 3006

[1] These figures are either axial or lateral or are vibrations
[2] Deviation ± 30 %

Subject to change without notice

Reduction factors[3] for pressure [K_p] and movement capacity [K_Δ]		
Temperature °C	K_p –	K_Δ –
–10 … 20	1.00	1.00
50	0.92	0.97
100	0.87	0.94
150	0.83	0.92
200	0.79	0.90
250	0.74	0.88
300	0.67	0.86
350	0.60	0.85
400	0.53	0.84

[3] Intermediate values can be linearly interpolated.

If the expansion joints Type BKT-7120 00S-KW are used for applications to DIN 1988, the movement capacities given in the tables must be reduced as follows:
PN 6 / PN 10 / PN 16 by 40 %,
PN 25 / PN 40 by 50 %

The expansion joints (up to PN 16) are tested by the DVGW to DIN 30 681 and are approved for gas plants. Marking with the relevant DIN DVGW Reg. No. possible for an additional charge.

Axial expansion joints

Type BKT-7129 00X
old designation 307/225

Type BKT-7129 00S-KW

Type BKT-7129 00X and BKT-7129 00S-KW
Axial steel expansion joint, **suitable for Δ_{ax} without prestressing during installation**, with flanges, inner sleeve and protective tube.

BOA Group

Materials – Type BKT-7129 00X
Bellows: Stainless steel,
up to DN 50 – Material type 1.4571
from DN 65 – Material type 1.4541
Weld ends: carbon steel, flanges: carbon steel
Inner sleeve and protective tube: carbon steel

Materials – Type BKT-7129 00S-KW
Bellows: Stainless steel, Material type 1.4571
Weld ends: 1.4571, flanges: 1.4571
Inner sleeve and protective tube: 1.4571 or 1.4404

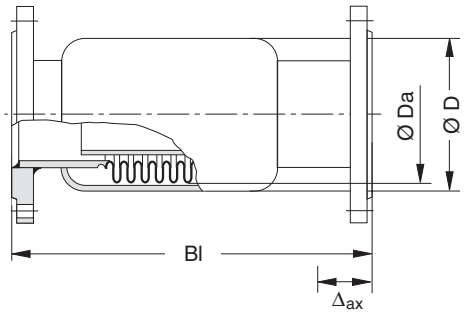

DN	PN	Nominal axial movement capacity Δ_{ax}	Overall length Bl.	Outer diameter Ø D	Weight	Flange connection dimension	Bellows: Outer diameter Ø Da	Bellows: Effective cross-section area A_B	Bellows: axiale Spring characteristic[1] $C_{ax.}$	7129 00X Item no.	7129 00S-KW Item no.
		[mm]	[mm]	[mm]	[kg]		[mm]	[cm²]	[N/mm]		
15	6	25	230	38	1.2	DIN EN 1092-1	35	6.4	43	5142 1121	5142 3007
	6	48	345	38	1.4		35	6.4	21	5142 1122	5142 3008
	6	74	430	38	1.6		34	6.3	14	5142 1123	
	10	74	430	38	2.1		34	6.3	14	5142 1156	
	16	25	230	38	1.7		35	6.4	43	5142 1154	5142 3040
	16	48	345	38	1.9		35	6.4	22	5142 1155	5142 3041
	16	74	450	38	2.2		34	6.0	24	5142 1189	
	25	20	210	38	1.9		34	6.0	94	5142 1220	
	25	38	300	38	2.1		34	6.0	47	5142 1221	
	25	57	400	38	2.3		34	6.0	31	5142 1222	
20	6	25	220	38	1.5		35	6.4	43	5142 1124	5142 3010
	6	48	335	38	1.7		35	6.4	22	5142 1125	5142 3011
	6	74	420	38	1.9		34	6.3	14	5142 1126	
	10	74	420	38	2.6		34	6.3	14	5142 1159	
	16	25	220	38	2.2		35	6.4	43	5142 1157	5142 3043
	16	48	335	38	2.4		35	6.4	22	5142 1158	5142 3044
	16	74	440	38	2.7		34	6.0	24	5142 1192	
	25	20	200	38	2.5		34	6.0	94	5142 1223	
	25	38	290	38	2.7		34	6.0	47	5142 1224	
	25	57	390	38	2.9		34	6.0	31	5142 1225	
25	6	32	245	45	2.0		42	9.6	38	5142 1127	5142 3013
	6	60	395	45	2.4		42	9.6	19	5142 1128	5142 3014
	6	90	495	45	2.7		42	9.4	12	5142 1129	5142 3015
	10	32	245	45	2.7		42	9.6	38	5142 1160	5142 3046
	10	60	395	45	3.1		42	9.6	19	5142 1161	5142 3047
	10	90	495	45	3.4		42	9.4	12	5142 1162	5142 3048
	16	28	245	45	2.7		42	9.4	89	5142 1193	5142 3075
	16	50	390	45	3.2		42	9.4	44	5142 1194	5142 3076
	16	72	430	45	3.3		41	9.1	27	5142 1195	5142 3077
	25	28	245	45	3.1		42	9.4	89	5142 1226	
	25	50	390	45	3.6		42	9.4	44	5142 1227	
	25	64	450	45	3.9		41	8.8	64	5142 1228	
32	6	38	275	56	2.9		51	15.2	36	5142 1130	5142 3016
	6	70	440	56	3.6		51	15.2	18	5142 1131	5142 3017
	6	106	565	56	4.5		51	15.0	12	5142 1132	
	10	38	275	56	4.1		51	15.2	36	5142 1163	5142 3049
	10	70	440	56	4.8		51	15.2	18	5142 1164	5142 3050
	10	106	565	56	5.3		51	15.0	12	5142 1165	
	16	28	270	56	4.1		51	15.0	84	5142 1196	5142 3078
	16	52	430	56	4.9		51	15.0	42	5142 1197	5142 3079
	16	74	465	56	5.1		51	14.7	37	5142 1198	
	25	28	270	56	4.5		51	15.0	84	5142 1229	
	25	52	430	56	5.3		51	15.0	42	5142 1230	
	25	74	490	56	5.8		51	14.2	60	5142 1231	

[1] Deviation ± 30 %

Subject to change without notice

Reduction factors[2] for pressure [K_p] and movement capacity [K_Δ]		
Temperature °C	K_p –	K_Δ –
–10 … 20	1.00	1.00
50	0.92	0.97
100	0.87	0.94
150	0.83	0.92
200	0.79	0.90
250	0.74	0.88
300	0.67	0.86
350	0.60	0.85
400	0.53	0.84

[2] Intermediate values can be linearly interpolated

If the expansion joints Type BKT-7129 00S-KW are used for applications to DIN 1988, the movement capacities given in the tables must be reduced as follows:
PN 6 / PN 10 / PN 16 by 40 %,
PN 25 by 50 %

The expansion joints (up to PN 16) are tested by the DVGW to DIN 30 681 and are approved for gas plants. Marking with the relevant DIN DVGW Reg. No. possible for an additional charge.

Type BKT-7129 00X and BKT-7129 00S-KW

Axial steel expansion joint, **suitable for Δ_{ax} without prestressing during installation**, with flanges, inner sleeve and protective tube.

Materials – Type BKT-7129 00X

Bellows: Stainless steel,
up to DN 50 – Material type 1.4571
from DN 65 – Material type 1.4541
Weld ends: carbon steel, flanges: carbon steel
Inner sleeve and protective tube: carbon steel

Materials – Type BKT-7129 00S-KW

Bellows: Stainless steel, material type 1.4571
Weld ends: 1.4571, flanges: 1.4571
Inner sleeve and protective tube: 1.4571 or 1.4404

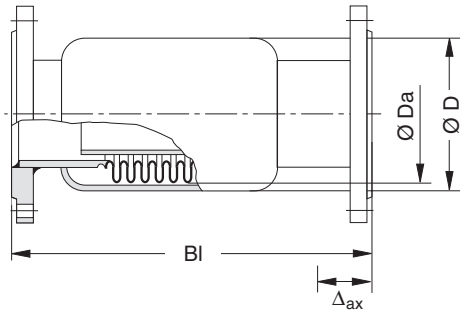

DN	PN	Nominal axial movement capacity Δ_{ax}	Overall length Bl.	Outer diameter Ø D	Weight	Flange connection dimension	Bellows: Outer diameter Ø Da	Bellows: Effective cross-section area A_B	Bellows: Axial Spring characteristic[1] $C_{ax.}$	7129 00X Item no.	7129 00S-KW Item no.
		[mm]	[mm]	[mm]	[kg]		[mm]	[cm²]	[N/mm]		
40	6	39	280	62	3.3	DIN EN 1092-1	58	19.7	38	5142 1133	5142 3019
	6	72	450	62	4.1		58	19.7	19	5142 1134	5142 3020
	6	108	580	62	4.7		58	19.5	13	5142 1135	5142 3021
	10	39	280	62	4.7		58	19.7	38	5142 1166	5142 3052
	10	72	450	62	5.5		58	19.7	19	5142 1167	5142 3053
	10	108	580	62	6.1		58	19.5	13	5142 1168	5142 3054
	16	29	270	62	4.8		58	19.5	90	5142 1199	5142 3081
	16	53	435	62	5.6		58	19.5	45	5142 1200	5142 3082
	16	75	520	62	6.1		57	19.1	40	5142 1201	5142 3083
	25	29	270	62	5.0		58	19.5	90	5142 1232	
	25	53	435	62	5.8		58	19.5	45	5142 1233	
	25	75	545	62	6.5		57	19.5	65	5142 1234	
50	6	48	320	80	4.4		74	32.0	52	5142 1136	5142 3022
	6	88	540	80	5.9		74	32.0	26	5142 1137	5142 3023
	6	120	645	80	6.8		74	31.6	23	5142 1138	5142 3024
	10	48	320	80	6.6		74	32.0	52	5142 1169	5142 3055
	10	88	540	80	8.1		74	32.0	26	5142 1170	5142 3056
	10	120	645	80	8.8		74	31.6	23	5142 1171	5142 3057
	16	38	315	80	6.7		74	31.8	99	5142 1202	5142 3084
	16	72	475	80	7.9		74	31.8	50	5142 1203	5142 3085
	16	120	670	80	9.5		74	30.9	36	5142 1204	5142 3086
	25	32	315	80	7.5		74	31.6	171	5142 1235	
	25	60	470	80	8.8		74	31.6	85	5142 1236	
	25	92	610	80	10.0		73	30.1	82	5142 1237	
65	6	55	385	100	6.6		94	52.7	78	5142 1139	5142 3025
	6	100	650	100	9.2		94	52.7	39	5142 1140	5142 3026
	6	165	850	100	11.0		94	52.4	18	5142 1141	5142 3027
	10	55	385	100	9.2		94	52.7	78	5142 1172	5142 3058
	10	100	650	100	12.0		94	52.7	39	5142 1173	5142 3059
	10	165	850	100	14.0		94	52.4	18	5142 1174	5142 3060
	16	44	360	100	9.1		94	52.4	133	5142 1205	5142 3087
	16	82	600	100	12.0		94	52.4	67	5142 1206	5142 3088
	16	120	740	100	14.0		93	50.4	67	5142 1207	
	25	35	355	100	10.0		94	51.7	310	5142 1238	
	25	64	550	100	13.0		94	51.7	155	5142 1239	
	25	98	720	100	16.0		93	49.4	129	5142 1240	
80	6	55	385	112	9.3		105	67.9	85	5142 1142	5142 3028
	6	100	650	112	12.0		105	67.9	42	5142 1143	5142 3029
	6	165	850	112	15.0		105	67.5	20	5142 1144	5142 3030
	10	55	385	112	11.0		105	67.9	85	5142 1175	5142 3061
	10	100	650	112	14.0		105	67.9	42	5142 1176	5142 3062
	10	165	850	112	16.0		105	67.5	20	5142 1177	5142 3063
	16	46	360	112	11.0		105	67.5	146	5142 1208	5142 3090
	16	85	600	112	14.0		105	67.5	73	5142 1209	5142 3091
	16	120	740	112	18.0		104	65.2	71	5142 1210	5142 3092
	25	35	355	112	13.0		105	66.7	342	5142 1241	
	25	64	550	112	16.0		105	66.7	171	5142 1242	
	25	98	720	112	19.0		104	64.1	139	5142 1243	

[1] Deviation ± 30 %

Subject to change without notice

If the expansion joints Type BKT-7129 00S-KW are used for applications to DIN 1988, the movement capacities given in the tables must be reduced as follows:
PN 6 / PN 10 / PN 16 by 40 %,
PN 25 by 50 %

The expansion joints (up to PN 16) are tested by the DVGW to DIN 30 681 and are approved for gas plants. Marking with the relevant DIN DVGW Reg. No. possible for an additional charge.

Type BKT-7129 00X
old designation 307/225

Type BKT-7129 00S-KW

Reduction factors[2] for pressure [K_p] and movement capacity [K_Δ]		
Temperature °C	K_p –	K_Δ –
–10 … 20	1.00	1.00
50	0.92	0.97
100	0.87	0.94
150	0.83	0.92
200	0.79	0.90
250	0.74	0.88
300	0.67	0.86
350	0.60	0.85
400	0.53	0.84

[2] Intermediate values can be linearly interpolated.

Axial expansion joints

Type BKT-7129 00X
old designation 307/225

Type BKT-7129 00S-KW

BOA Group

Type BKT-7129 00X and BKT-7129 00S-KW
Axial steel expansion joint, **suitable for Δ_{ax} without prestressing during installation**, with flanges, inner sleeve and protective tube.

Materials – Type BKT-7129 00X
Bellows: Stainless steel, Material type 1.4541
Weld ends: carbon steel, flanges: carbon steel
Inner sleeve and protective tube: carbon steel

Materials – Type BKT-7129 00S-KW
Bellows: Stainless steel, material type 1.4571
Weld ends: 1.4571, flanges: 1.4571
Inner sleeve and protective tube: 1.4571 or 1.4404

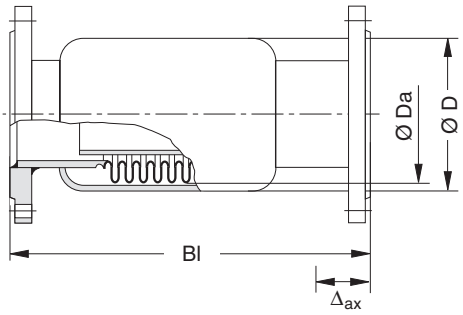

DN	PN	Nominal axial movement capacity Δ_{ax}	Overall length Bl.	Outer diameter Ø D	Weight	Flange connection dimension	Bellows: Outer diameter Ø Da	Bellows: Effective cross-section area A_B	Bellows: axiale Spring characteristic[1] $C_{ax.}$	7129 00X Item no.	7129 00S-KW Item no.
		[mm]	[mm]	[mm]	[kg]		[mm]	[cm²]	[N/mm]		
100	6	75	485	144	13.0	DIN EN 1092-1	136	115.0	90	5142 1145	5142 3031
	6	140	820	144	19.0		136	115.0	45	5142 1146	5142 3032
	6	200	1050	144	23.0		136	114.0	29	5142 1147	5142 3033
	10	75	485	144	16.0		136	115.0	90	5142 1178	5142 3064
	10	140	820	144	21.0		136	115.0	45	5142 1179	5142 3065
	10	200	1050	144	25.0		136	114.0	29	5142 1180	5142 3066
	16	57	415	144	15.0		136	114.0	216	5142 1211	5142 3093
	16	105	730	144	20.0		136	114.0	108	5142 1212	5142 3094
	16	160	960	144	27.0		135	110.0	87	5142 1213	5142 3095
	25	46	410	144	18.0		136	113.0	415	5142 1244	
	25	85	690	144	24.0		136	113.0	207	5142 1245	
	25	130	900	144	30.0		135	109.0	150	5142 1246	
125	6	75	490	168	20.0		158	159.0	103	5142 1148	5142 3034
	6	140	825	168	29.0		158	159.0	51	5142 1149	5142 3035
	6	200	1055	168	35.0		158	158.0	32	5142 1150	5142 3036
	10	75	490	168	23.0		158	159.0	103	5142 1181	5142 3067
	10	140	825	168	32.0		158	159.0	51	5142 1182	5142 3068
	10	200	1055	168	38.0		158	158.0	32	5142 1183	5142 3069
	16	57	420	168	23.0		158	158.0	246	5142 1214	5142 3096
	16	105	735	168	30.0		158	158.0	123	5142 1215	5142 3097
	16	160	965	168	39.0		157	154.0	98	5142 1216	5142 3098
	25	46	415	168	26.0		158	157.0	476	5142 1247	
	25	85	695	168	34.0		158	157.0	238	5142 1248	
	25	130	905	168	43.0		157	152.0	168	5142 1249	
150	6	75	490	197	24.0		186	228.0	119	5142 1151	5142 3037
	6	140	825	197	35.0		186	228.0	59	5142 1152	5142 3038
	6	200	1055	197	43.0		186	226.0	37	5142 1153	5142 3039
	10	75	490	197	28.0		186	228.0	119	5142 1184	5142 3070
	10	140	825	197	39.0		186	228.0	59	5142 1185	5142 3071
	10	200	1055	197	47.0		186	226.0	37	5142 1186	5142 3072
	16	58	420	197	26.0		186	226.0	285	5142 1217	5142 3099
	16	107	735	197	37.0		186	226.0	142	5142 1218	5142 3100
	16	160	965	197	48.0		185	222.0	111	5142 1219	5142 3101
	25	46	415	197	33.0		186	225.0	554	5142 1250	
	25	85	695	197	43.0		186	225.0	277	5142 1251	
	25	130	905	197	54.0		185	219.0	191	5142 1252	

[1] Deviation ± 30 %

Subject to change without notice

Reduction factors[2] for pressure [K_p] and movement capacity [K_Δ]		
Temperature °C	K_p –	K_Δ –
–10 … 20	1.00	1.00
50	0.92	0.97
100	0.87	0.94
150	0.83	0.92
200	0.79	0.90
250	0.74	0.88
300	0.67	0.86
350	0.60	0.85
400	0.53	0.84

[2] Intermediate values can be linearly interpolated.

If the expansion joints Type BKT-7129 00S-KW are used for applications to DIN 1988, the movement capacities given in the tables must be reduced as follows:
PN 6 / PN 10 / PN 16 by 40 %,
PN 25 by 50 %

The expansion joints (up to PN 16) are tested by the DVGW to DIN 30 681 and are approved for gas plants. Marking with the relevant DIN DVGW Reg. No. possible for an additional charge.

Type BKT-7179 00X-MS and BKT-7179 00X-ME

Axial steel expansion joint, **suitable for Δ_{ax} without prestressing during installation**, with weld ends and Mannesmann press fitting connector, inner sleeve and protective tube.

Materials – Type BKT-7179 00X-MS

Bellows: Stainless steel, material type 1.4571
Weld ends: carbon steel
Inner sleeve and protective tube: carbon steel
Fitting: carbon steel

Materials – Type BKT-7179 00X-ME

Bellows: Stainless steel, material type 1.4571
Weld ends: 1.4571
Inner sleeve and protective tube: 1.4571 or 1.4404
Fitting: 1.4404

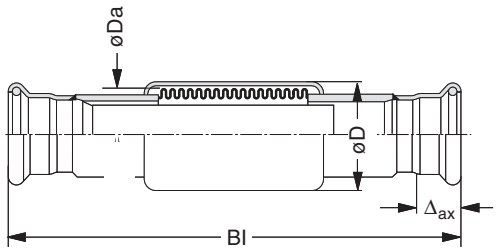

DN	PN	Nominal axial movement capacity	Overall length Bl.		Outer diameter Ø D		Weight	Bellows			7179 00X-MS	7179 00X-ME
								Outer diameter	Effective cross-section area	axiale Spring characteristic[1]		
		Δ_{ax}	MS	ME	MS	ME		Ø Da	A_B	$C_{ax.}$	Item no.	Item no.
		[mm]	[mm]		[mm]		[kg]	[mm]	[cm²]	[N/mm]		
12	16	25	323		38		0.6	35	6.4	43	5142 2118	
	16	48	438		38		0.8	35	6.4	22	5142 2119	
	16	74	543		38		1.1	34	6.0	24	5142 2120	
15	16	25	325	338	38	40	0.6	35	6.4	43	5142 2121	5140 3159
	16	48	440	453	38	40	0.8	35	6.4	22	5142 2122	5140 3160
	16	74	545		38		1.1	34	6.0	24	5142 2123	
18	16	25	278	334	38	40	0.6	35	6.4	43	5142 2100	5140 3162
	16	48	393	449	38	40	0.8	35	6.4	22	5142 2101	5140 3163
	16	74	498		38		1.1	34	6.0	24	5142 2102	
22	16	25	270		38	40	0.6	35	6.4	43	5142 2103	5140 3165
	16	48	385		38	40	0.8	35	6.4	22	5142 2104	5140 3166
	16	74	490		38		1.1	34	6.0	24	5142 2105	
28	16	28	301		45	48,3	0.8	42	9.4	89	5142 2106	5140 3168
	16	50	446		45	48,3	1.3	42	9.4	44	5142 2107	5140 3169
	16	72	486		45	48,3	1.4	41	9.1	27	5142 2108	5140 3170
35	16	28	334		56	57	1.2	51	15.0	84	5142 2109	5140 3171
	16	52	494		56	57	2.0	51	15.0	42	5142 2110	5140 3172
	16	74	529		56		2.2	51	14.7	37	5142 2111	
42	16	29	342		62	63,5	1.5	58	19.5	90	5142 2112	5140 3174
	16	53	507		62	63,5	2.3	58	19.5	45	5142 2113	5140 3175
	16	75	592		62	63,5	2.8	57	19.1	40	5142 2114	5140 3176
54	16	38	399		80		2.4	74	31.8	99	5142 2115	5140 3177
	16	72	559		80		3.6	74	31.8	50	5142 2116	5140 3178
	16	120	754		80		5.2	74	30.9	36	5142 2117	5140 3179
65	16	44	486		101,6		3.9	94	52.4	133	–	5140 3180
	16	82	726		101,6		6.4	94	52.4	67	–	5140 3181
80	16	46	508		114,3		4.7	105	67.5	146	–	5140 3182
	16	85	748		114,3		7.8	105	67.5	73	–	5140 3183
	16	120	888		114,3		11.2	104	65.2	71	–	5140 3184
100	16	57	595		144		8.0	136	114.0	216	–	5140 3185
	16	105	910		144		13.4	136	114.0	108	–	5140 3186
	16	160	1140		144		20.4	135	110.0	87	–	5140 3187

[1] Deviation ±30 %
DN ≙ outer dimension of Mannesmann pipe

Subject to change without notice

Allowable operating conditions:

"Heating" system: max. operating pressure 16 bar, max. temperature 110 °C

"Sanitary" system: max. operating pressure 16 bar, max. temperature 85 °C (to DIN 1988) or 110 °C

If the expansion joints Type BKT-7179 00X-KW are used for applications to DIN 1988, the movement capacities given in the tables must be reduced by 40%:

The working and laying guidelines for pipes and press fittings issued by Mannesmann Pressfitting must be noted and followed at all times.

Type BKT-7179 00X-MS
Type BKT-7179 00X-ME
For Mannesmann press fitting system

Axial expansion joints

Type BKT-7160 00S-TI
Type BKT-7160 00S-RI
Type BKT-7160 00S-EI

BOA Group

Type BKT-7160 00S-…

Axial steel expansion joint with threaded **sockets suitable for Δ_{ax} without prestressing** or lateral movement capacity or for removing vibrations.

Materials – Type BKT-7160 00S-TI

Bellows: Stainless steel 1.4571
Spacer sheets: Stainless steel 1.4301
Threaded coupling: Malleable cast iron, zinc-plated
Gasket: Klingersil C-4400
Maximum operating temperature: 300 °C

Materials – Type BKT-7160 00S-RI

Bellows: Stainless steel 1.4571
Spacer sheets: Stainless steel 1.4301
Threaded coupling: Gunmetal 2.1096
Gasket: Klingersil C-4400
Maximum operating temperature: 225 °C

Materials – Type BKT-7160 00S-EI

Bellows: Stainless steel 1.4571
Spacer sheets: Stainless steel 1.4301
Threaded coupling: Stainless steel 1.4571
Gasket: Klingersil C-4400
Maximum operating temperature: 300 °C

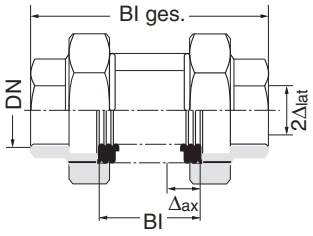

DN	Female thread (DIN 2999)	PN	Nominal movement capacity[1]			Expansion joint, overall length	Built-in length, bellows	Weight	Bellows			Item no.
			axial	lateral	All-round vibration				Effective cross-section area	Spring characteristic[2]		
			Δ_{ax}	$\pm \Delta_{lat}$	±	$Bl._{ges}$	Bl.		A_B	$C_{ax.}$	$C_{lat.}$	
			[mm]	[mm]	[mm]	[mm]	[mm]	[kg]	[cm²]	[N/mm]	[N/mm]	
BKT-7160 00S-TI												
15	Rp 1/2	10	16	4.5	0.35	109	56	0.3	5.5	42	19	5142 4581
20	Rp 3/4	10	20	6.0	0.45	124	65	0.4	6.4	54	23	5142 4582
25	Rp 1	6 10	28 26	8.5 8.0	0.65 0.55	148 152	83 87	0.6 0.6	9.5 9.5	45 98	16 32	5142 4577 5142 4583
32	Rp 1 1/4	6 10	32 28	8.5 8.5	0.70 0.65	158 167	89 98	0.9 0.9	15.0 15.0	42 83	21 34	5142 4578 5142 4584
40	Rp 1 1/2	6 10	33 29	8.5 8.5	0.70 0.65	170 179	95 104	1.2 1.2	19.5 19.5	45 89	25 41	5142 4579 5142 4585
50	Rp 2	6 10	41 37	10.0 9.5	0.80 0.75	201 207	114 120	1.8 1.9	32.0 32.0	61 105	38 59	5142 4580 5142 4586
BKT-7160 00S-RI												
15	Rp 1/2	10	10	3.0	0.25	94	45	0.2	2.6	56	12	5142 4561
20	Rp 3/4	10	20	6.0	0.45	122	65	0.5	6.4	54	23	5142 4562
25	Rp 1	6 10	28 26	8.5 8.0	0.65 0.55	146 150	83 87	0.7 0.7	9.5 9.5	45 98	16 32	5142 4557 5142 4563
32	Rp 1 1/4	6 10	32 28	8.5 8.5	0.70 0.65	156 165	89 98	1.0 1.1	15.0 15.0	42 83	21 34	5142 4558 5142 4564
40	Rp 1 1/2	6 10	33 29	8.5 8.5	0.70 0.65	168 177	95 104	1.4 1.4	19.5 19.5	45 89	25 41	5142 4559 5142 4565
50	Rp 2	6 10	41 37	10.0 9.5	0.80 0.75	199 205	114 120	2.1 2.1	32.0 32.0	61 105	38 59	5142 4560 5142 4566
BKT-7160 00S-EI												
15	Rp 1/2	10	16	4.5	0.35	109	56	0.3	5.5	42	19	5142 4872
20	Rp 3/4	10	20	6.0	0.45	124	65	0.4	6.4	54	23	5142 4873
25	Rp 1	10	26	8.0	0.55	152	87	0.6	9.5	98	32	5142 4874
32	Rp 1 1/4	10	28	8.5	0.65	167	98	0.9	15.0	83	34	5142 4875
40	Rp 1 1/2	10	29	8.5	0.65	179	104	1.2	19.5	89	41	5142 4876
50	Rp 2	10	37	9.5	0.75	207	120	1.9	32.0	105	59	5142 4877

[1] These figures are either axial or lateral or are vibrations
[2] Deviation ± 30 %

Subject to change without notice

Reduction factors[3] for pressure [K_p] and movement capacity [K_Δ]		
Temperature °C	K_p –	K_Δ –
–10 … 20	1.00	1.00
50	0.92	0.97
100	0.87	0.94
150	0.83	0.92
200	0.79	0.90
225	0.76	0.89
250	0.76	0.88
300	0.67	0.86

[3] Intermediate values can be linearly interpolated.

The expansion joints Type BKT-7160 00S-TI and EI are tested by the DVGW to DIN 30 681 and are approved for gas plants.

Type BKT-7160 00S-TA
Type BKT-7160 00S-RA

Type BKT-7160 00S-TA and BKT-7160 00S-RA
Axial steel expansion joint with threaded sockets **suitable for Δ_{ax} without prestressing** or lateral movement capacity or for removing vibrations.

Materials – Type BKT-7160 00S-TA
Bellows: Stainless steel 1.4571
Spacer sheets: Stainless steel 1.4301
Threaded coupling: Malleable cast iron, zinc-plated
Gasket: Klingersil C-4400
Maximum operating temperature: 300 °C

Materials – Type BKT-7160 00S-RA
Bellows: Stainless steel 1.4571
Spacer sheets: Stainless steel 1.4301
Threaded coupling: Gunmetal 2.1096
Gasket: Klingersil C-4400
Maximum operating temperature: 225 °C

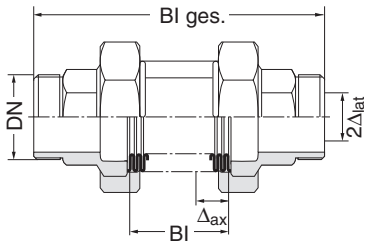

BKT-7160 00S-TA

DN	Male thread (DIN 2999)	PN	Nominal movement capacity[1] axial Δ_{ax}	lateral $\pm \Delta_{lat}$	All-round vibration $\pm$	Expansion joint - overall length $Bl._{ges}$	Built-in length, bellows $Bl.$	Weight	Bellows: Effective cross-section area A_B	Spring characteristic[2] $C_{ax.}$	$C_{lat.}$	Item no.
			[mm]	[mm]	[mm]	[mm]	[mm]	[kg]	[cm²]	[N/mm]	[N/mm]	
20	R 3/4	10	20	6.0	0.45	166	65	0.5	6.4	54	23	5142 4631
25	R 1	6 10	28 26	8.5 8.0	0.65 0.55	194 198	83 87	0.7 0.7	9.5 9.5	45 98	16 32	5142 4627 5142 4632
32	R 1 1/4	6 10	32 28	8.5 8.5	0.70 0.65	208 217	89 98	1.1 1.1	15.0 15.0	42 83	21 34	5142 4628 5142 4633
40	R 1 1/2	6 10	33 29	8.5 8.5	0.70 0.65	222 231	95 104	1.4 1.4	19.5 19.5	45 89	25 41	5142 4629 5142 4634
50	R 2	6 10	41 37	10.0 9.5	0.80 0.75	259 265	114 120	2.0 2.1	32.0 32.0	61 105	38 59	5142 4630 5142 4635

BKT-7160 00S-RA

DN	Male thread (DIN 2999)	PN	Nominal movement capacity[1] axial Δ_{ax}	lateral $\pm \Delta_{lat}$	All-round vibration $\pm$	Expansion joint - overall length $Bl._{ges}$	Built-in length, bellows $Bl.$	Weight	Bellows: Effective cross-section area A_B	Spring characteristic[2] $C_{ax.}$	$C_{lat.}$	Item no.
			[mm]	[mm]	[mm]	[mm]	[mm]	[kg]	[cm²]	[N/mm]	[N/mm]	
20	R 3/4	10	20	6.0	0.45	154	65	0.5	6.4	54	23	5142 4904
25	R 1	6 10	28 26	8.5 8.0	0.65 0.55	186 190	83 87	0.7 0.7	9.5 9.5	45 98	16 32	5142 4900 5142 4905
32	R 1 1/4	6 10	32 28	8.5 8.5	0.70 0.65	192 201	89 98	1.1 1.1	15.0 15.0	42 83	21 34	5142 4901 5142 4906
40	R 1 1/2	6 10	33 29	8.5 8.5	0.70 0.65	208 217	95 104	1.4 1.4	19.5 19.5	45 89	25 41	5142 4902 5142 4907
50	R 2	6 10	41 37	10.0 9.5	0.80 0.75	241 247	114 120	2.0 2.1	32.0 32.0	61 105	38 59	5142 4903 5142 4908

[1] These figures are either axial or lateral or are vibrations
[2] Deviation ± 30 %

Subject to change without notice

Reduction factors[3] for pressure [K_p] and movement capacity [K_Δ]		
Temperature °C	K_p –	K_Δ –
–10 … 20	1.00	1.00
50	0.92	0.97
100	0.87	0.94
150	0.83	0.92
200	0.79	0.90
225	0.76	0.89
250	0.74	0.88
300	0.67	0.86

[3] Intermediate values can be linearly interpolated.

The expansion joints Type BKT-7160 00S-TA and TA are tested by the DVGW to DIN 30 681 and are approved for gas plants.

Axial expansion joints

Type BKT-7162 00S-TI
Type BKT-7162 00S-RI
Type BKT-7162 00S-EI

BOA Group

Type BKT-7162 00S-…

Axial steel expansion joint with threaded sockets and protective tube, **suitable for Δ_{ax} without pre-stressing** or for removing vibrations.

Materials – Type BKT-7162 00S-TI

Bellows: Stainless steel 1.4571
Spacer sheets: Stainless steel 1.4301
Threaded coupling: Malleable cast iron, zinc-plated
Gasket: Klingersil C-4400
External sleeve: carbon steel, zinc-plated, soft soldered
Maximum operating temperature: 180 °C

Materials – Type BKT-7162 00S-RI

Bellows: Stainless steel 1.4571
Spacer sheets: Stainless steel 1.4301
Threaded coupling: Gunmetal 2.1096
Gasket: Klingersil C-4400
External sleeve: Brass, soft soldered
Maximum operating temperature: 180 °C

Materials – Type BKT-7162 00S-EI

Bellows: Stainless steel 1.4571
Spacer sheets: Stainless steel 1.4301
Threaded coupling: Stainless steel 1.4571
Gasket: Klingersil C-4400
External sleeve: stainless steel
Maximum operating temperature: 300 °C

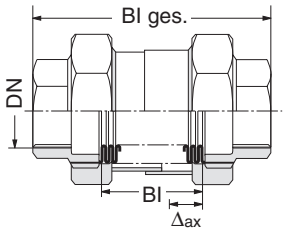

DN	Female thread (DIN 2999)	PN	Nominal movement capacity[1]		Expansion joint - overall length	Built-in length, bellows	Weight	Bellows		Item no.
			axial	All-round vibration				Effective cross-section area	Axial Spring characteristic[2]	
			Δ_{ax}	±	$Bl._{ges}$	Bl.		A_B	$C_{ax.}$	
			[mm]	[mm]	[mm]	[mm]	[kg]	[cm²]	[N/mm]	
BKT-7162 00S-TI										
15	Rp 1/2	10	16	0.35	119	66	0.4	5.5	37	5142 4611
20	Rp 3/4	10	20	0.45	129	70	0.5	6.4	48	5142 4612
25	Rp 1	10	26	0.55	152	87	0.7	9.5	98	5142 4613
32	Rp 1 1/4	10	28	0.65	167	98	1.0	15.0	83	5142 4614
40	Rp 1 1/2	10	29	0.65	179	104	1.5	19.5	89	5142 4615
50	Rp 2	10	37	0.75	207	120	2.4	32.0	105	5142 4616
BKT-7162 00S-RI										
15	Rp 1/2	10	10	0.25	99	50	0.2	2.6	50	5142 4605
20	Rp 3/4	10	20	0.45	127	70	0.6	6.4	48	5142 4606
25	Rp 1	10	26	0.55	150	87	0.8	9.5	98	5142 4607
32	Rp1 1/4	10	28	0.65	165	98	1.2	15.0	83	5142 4608
40	Rp 1 1/2	10	29	0.65	177	104	1.5	19.5	89	5142 4609
50	Rp 2	10	37	0.75	205	120	2.7	32.0	105	5142 4610
BKT-7162 00S-EI										
15	Rp 1/2	10	16	0.35	119	66	0.4	5.5	37	5142 4928
20	Rp 3/4	10	20	0.45	129	70	0.5	6.4	48	5142 4929
25	Rp 1	10	26	0.55	152	87	0.7	9.5	98	5142 4930
32	Rp 1 1/4	10	28	0.65	167	98	1.0	15.0	83	5142 4931
40	Rp 1 1/2	10	29	0.65	179	104	1.5	19.5	89	5142 4932
50	Rp 2	10	37	0.75	207	120	2.4	32.0	105	5142 4933

[1] These figures are either axial or are vibrations
[2] Deviation ± 30 %

Subject to change without notice

Reduction factors[3] for pressure [K_p] and movement capacity [K_Δ]		
Temperature °C	K_p –	K_Δ –
–10 … 20	1.00	1.00
50	0.92	0.97
100	0.87	0.94
150	0.83	0.92
200	0.79	0.90
225	0.76	0.89
250	0.74	0.88
300	0.67	0.86

[3] Intermediate values can be linearly interpolated.

The expansion joints Type BKT-7162 00S-T1 and EI are tested by the DVGW to DIN 30 681 and are approved for gas plants.

Type BKT-7162 00S-TA
Type BKT-7162 00S-RA

Type BKT-7162 00S-…
Axial steel expansion joint with threaded sockets and protective tube, **suitable for Δ_{ax} without prestressing** or for removing vibrations.

Materials – Type BKT-7162 00S-TA
Bellows: Stainless steel 1.4571
Spacer sheets: Stainless steel 1.4301
Threaded coupling: Malleable cast iron, zinc-plated
Gasket: Klingersil C-4400
External sleeve: Mild steel, zinc-plated, soft soldered
Maximum operating temperature: 180 °C

Materials – Type BKT-7162 00S-RA
Bellows: Stainless steel 1.4571
Spacer sheets: Stainless steel 1.4301
Threaded coupling: Gunmetal 2.1096
Gasket: Klingersil C-4400
External sleeve: Brass, soft soldered
Maximum operating temperature: 180 °C

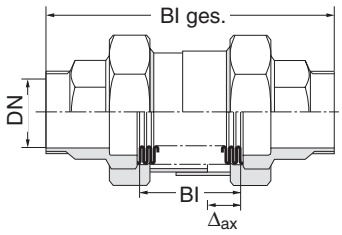

DN	Male thread (DIN 2999)	PN	Nominal movement capacity[1]		Expansion joint - overall length	Built-in length, bellows	Weight	Bellows		Item no.
			axial Δ_{ax}	All-round vibration ±	$Bl._{ges}$	Bl.		Effective cross-section area A_B	Axial Spring characteristic[2] $C_{ax.}$	
			[mm]	[mm]	[mm]	[mm]	[kg]	[cm²]	[N/mm]	
20	R 3/4	10	20	0.45	171	70	0.6	6.4	48	5142 4622
25	R 1	10	26	0.55	198	87	0.8	9.5	98	5142 4623
32	R 1 1/4	10	28	0.65	217	98	1.3	15.0	83	5142 4624
40	R1 1/2	10	29	0.65	231	104	1.7	19.5	89	5142 4625
50	R 2	10	37	0.75	265	120	2.6	32.0	105	5142 4626
20	R 3/4	10	20	0.45	159	70	0.6	6.4	48	5142 4910
25	R 1	10	26	0.55	190	87	0.8	9.5	98	5142 4911
32	R 1 1/4	10	28	0.65	201	98	1.3	15.0	83	5142 4912
40	R 1 1/2	10	29	0.65	217	104	1.7	19.5	89	5142 4913
50	R 2	10	37	0.75	247	120	2.6	32.0	105	5142 4914

BKT-7162 00S-TA

BKT-7162 00S-RA

[1] These figures are either axial or are vibrations
[2] Deviation ± 30 %

Subject to change without notice

Reduction factors[3] for pressure [K_p] and movement capacity [K_Δ]		
Temperature °C	K_p –	K_Δ –
–10 … 20	1.00	1.00
50	0.92	0.97
100	0.87	0.94
150	0.83	0.92
180	0.81	0.91

[3] Intermediate values can be linearly interpolated.

Type BKT-7160 00S-LF
Type BKT-7162 00S-LF

Type BKT-7160 00S-LF (gunmetal)

Axial steel expansion joint with **soldering fitting suitable for Δ_{ax} without prestressing** or lateral movement capacity or for removing vibrations.

Materials – Type BKT-7160 00S-LF

Bellows: Stainless steel 1.4571
Spacer sheets: Stainless steel 1.4301
Soldering fitting: Gunmetal 2.1096
Gasket: Klingersil C-4400
Maximum operating temperature: 225 °C

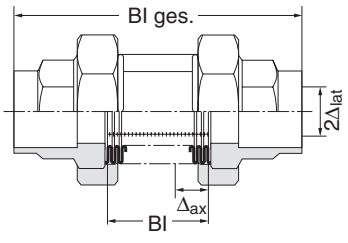

Type BKT-7162 00S-LF (gunmetal)

Axial steel expansion joints with soldering fitting and protective tube, **suitable for Δ_{ax} without prestressing** or for removing vibrations.

Materials – Type BKT-7162 00S-LF

Bellows: Stainless steel 1.4571
Spacer sheets: Stainless steel 1.4301
Soldering fitting: Gunmetal 2.1096
Gasket: Klingersil C-4400
External sleeve: Brass, soft soldered
Maximum operating temperature: 180 °C

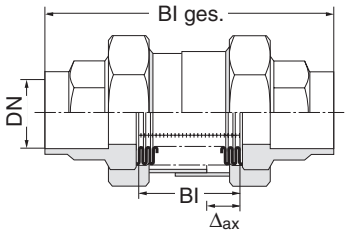

BKT-7160 00S-LF

BKT-7162 00S-LF

DN	PN	Nominal movement capacity[1] axial Δ_{ax} [mm]	lateral $\pm \Delta_{lat}$ [mm]	All-round vibration ± [mm]	Expansion joint - overall length $Bl._{ges}$ [mm]	Built-in length, bellows Bl. [mm]	Weight [kg]	Bellows: Effective cross-section area A_B [cm²]	Spring characteristic[2] $C_{ax.}$ [N/mm]	Spring characteristic[2] $C_{lat.}$ [N/mm]	Item no.
15	10	10	3.0	0.25	98	45	0.2	2.6	56	12	5142 4915
18	10	10	3.0	0.25	98	45	0.2	2.6	56	12	5142 4916
22	10	20	6.0	0.45	122	65	0.5	6.4	54	23	5142 4917
28	10	20	6.0	0.45	124	65	0.5	6.4	54	23	5142 4918
35	10	26	8.0	0.55	150	87	0.7	9.5	98	32	5142 4919
15	10	10	–	0.25	103	50	0.2	2.6	50	–	5142 4922
18	10	10	–	0.25	103	50	0.2	2.6	50	–	5142 4923
22	10	20	–	0.45	127	70	0.6	6.4	48	–	5142 4924
28	10	20	–	0.45	129	70	0.6	6.4	48	–	5142 4925
35	10	26	–	0.55	156	87	0.8	9.5	98	–	5142 4926

[1] These figures are either axial or lateral or are vibrations
[2] Deviation ± 30 %

Subject to change without notice

Reduction factors[3] for pressure [K_p] and movement capacity [K_Δ]		
Temperature °C	K_p –	K_Δ –
–10 … 20	1.00	1.00
50	0.92	0.97
100	0.87	0.94
150	0.83	0.92
180	0.81	0.92
200	0.79	0.90
225	0.76	0.89

[3] Intermediate values can be linearly interpolated.

Important:
The bellows must be removed before starting soldering in order to prevent thermal over-loading of the bellows.

Type BOA-I

Type BOA-I
Axial expansion joint with soldering ends made of copper, **drinking water resistant, prestressed.**

Materials
Bellows: Bronze
Soldering ends: Copper
External sleeve: Copper

Allowable operating conditions
max. temperature 180 °C
Operating pressure PN 16
5000 life cycles

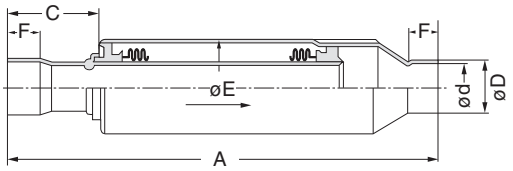

DN	PN	Expansion joint - overall length A	Nominal movement capacity Δ_{ax}	Dimensions C	Dimensions F	Diameter d	Diameter D	Diameter E	Weight	Bellows: Inherent resistance[1]	Bellows: Effective area	Item no.
		[mm]	[mm]	[mm]	[mm]	[mm]	[mm]	[mm]	[kg]	[N]	[cm²]	
15	16	164	18	35	12	15	18	26	0.31	106	3.1	5142 4426
18	16	168	18	39	14	18	21	30	0.39	139	4.1	5142 4427
22	16	178	18	42	17	22	25	35	0.43	227	5.7	5142 4428
28	16	183	18	45	20	28	31	43	1.71	261	8.8	5142 4429
35	16	290	25	65	25	35	40	70	1.93	110	17.2	5142 4430
42	16	305	25	71	29	42	47	80	2.45	170	25.3	5142 4431

[1] Inherent resistance for 18 and 25 mm compression

Subject to change without notice

Reduction factors[2] for pressure [K_p] and movement capacity [K_Δ]		
Temperature °C	K_p –	K_Δ –
–10 … 20	1.00	1.00
50	0.92	0.97
100	0.87	0.94
150	0.83	0.92
180	0.77	0.90

[2] Intermediate values can be linearly interpolated.

Type BKT-7150 000
old designation 307/241

Type BKT-7150 000
Axial steel expansion joint with loose flanges and rim for axial or lateral movement capacity or for removing vibrations.

The expansion joints are supplied with suitable gaskets.

Materials
Bellows: Stainless steel,
up to DN 50 – Material type 1.4571
from DN 65 – Material type 1.4541
Rims:
up to DN 50 – Material type 1.4571
from DN 65 – Material type 1.4541
Flanges: Carbon steel, zinc-plated

BOA Group

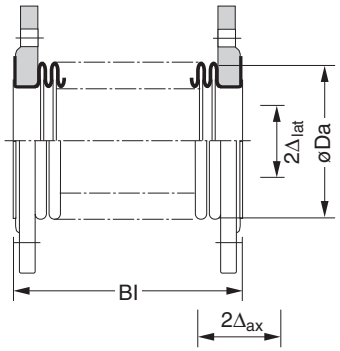

DN	PN	Nominal movement capacity[1] ± axial $\pm \Delta_{ax}$	lateral $\pm \Delta_{lat}$	All-round vibration ±	Overall length Bl.	Weight	Flange connection dimension	Bellows: Outer diameter Ø Da	Bellows: Effective cross-section area A_B	Bellows: Spring characteristic[2] $C_{ax.}$	Bellows: Spring characteristic[2] $C_{lat.}$	Item no.
		[mm]	[mm]	[mm]	[mm]	[kg]		[mm]	[cm²]	[N/mm]	[N/mm]	
20	6	13	7	0.5	90	1.2	DIN EN 1092-1	35	6.4	43	14	5142 2019
	10	13	7	0.5	94	1.9		35	6.4	43	14	5142 2044
	16	10	4	0.3	80	1.8		35	6.4	57	33	5142 2069
25	6	14	7	0.5	100	1.5		42	9.4	89	33	5142 2021
	10	14	7	0.5	104	2.3		42	9.4	89	33	5142 2046
	16	10	4	0.3	88	2.2		42	9.4	118	73	5142 2071
32	6	15	8	0.6	112	2.1		51	15.0	84	36	5142 2023
	10	15	8	0.6	116	3.3		51	15.0	84	36	5142 2048
	16	11	4	0.3	96	3.2		51	15.0	112	85	5142 2073
40	6	15	8	0.6	118	2.4		58	19.5	90	44	5142 2025
	10	15	8	0.6	122	3.7		58	19.5	90	44	5142 2050
	16	11	4	0.3	100	3.6		58	19.5	120	105	5142 2075
50	6	20	9	0.6	130	2.8		74	31.8	99	62	5142 2027
	6	25	14	1.0	146	3.1		74	31.1	105	47	5142 2028
	10	20	9	0.6	138	5.1		74	31.8	99	62	5142 2052
	10	25	14	1.0	154	5.4		74	31.1	105	47	5142 2053
	16	15	5	0.4	114	5.0		74	31.8	132	142	5142 2077
	16	24	15	1.1	166	5.6		73	30.1	173	63	5142 2078
65	6	15	3	0.3	96	3.3		94	53.1	90	214	5142 2029
	6	27	13	0.9	160	3.7		94	52.7	78	47	5142 2030
	6	35	19	1.3	176	4.0		94	51.7	84	40	5142 2031
	10	15	3	0.3	104	6.0		94	53.1	90	214	5142 2054
	10	28	15	1.1	182	7.0		93	51.1	161	77	5142 2056
	16	12	2	0.2	102	6.1		94	52.7	172	434	5142 2079
	16	22	10	0.7	164	6.5		94	52.4	133	86	5142 2055
	16	27	17	1.2	208	7.6		93	49.4	258	87	5142 2080

[1] These figures are either axial or lateral or are vibrations
[2] Deviation ± 30 %

Subject to change without notice

Reduction factors[3] for pressure [K_p] and movement capacity [K_Δ]		
Temperature °C	K_p –	K_Δ –
–10 … 20	1.00	1.00
50	0.92	0.97
100	0.87	0.94
150	0.83	0.92
200	0.79	0.90
250	0.74	0.88
300	0.67	0.86
350	0.60	0.85
400	0.53	0.84

[3] Intermediate values can be linearly interpolated.

The expansion joints are tested by the DVGW to DIN 30 681 and are approved for gas plants.
Marking with the relevant DIN DVGW Reg. No. possible for an additional charge.

Type BKT-7150 000
old designation 307/241

Type BKT-7150 000
Axial steel expansion joint with loose flanges and rim for axial or lateral movement capacity or for removing vibrations.

The expansion joints are supplied with suitable gaskets.

Materials
Bellows: Stainless steel,
up to DN 50 – Material type 1.4571
from DN 65 – Material type 1.4541
Rims:
up to DN 50 – Material type 1.4571
from DN 65 – Material type 1.4541
Flanges: Carbon steel, zinc-plated

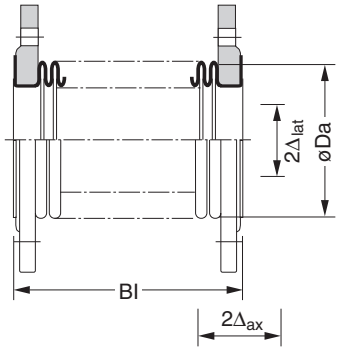

DN	PN	Nominal movement capacity[1] axial ± Δ_{ax} [mm]	lateral ± Δ_{lat} [mm]	All-round vibration ± [mm]	Overall length Bl. [mm]	Weight [kg]	Flange connection dimension	Bellows: Outer diameter Ø Da [mm]	Effective cross-section area A_B [cm²]	Spring characteristic[2] $C_{ax.}$ [N/mm]	Spring characteristic[2] $C_{lat.}$ [N/mm]	Item no.
80	6	15	3	0.2	100	5.3	DIN EN 1092-1	105	68.2	98	301	5142 2032
	6	28	12	0.8	164	5.8		105	67.9	85	67	5142 2033
	6	35	17	1.2	180	6.2		105	66.7	91	56	5142 2034
	10	15	3	0.2	108	7.4		105	68.2	98	301	5142 2057
	10	28	13	0.9	186	8.6		105	66.0	175	109	5142 2059
	16	12	2	0.2	106	7.4		105	67.9	188	614	5142 2081
	16	23	9	0.7	170	8.0		105	67.5	146	118	5142 2058
	16	27	15	1.1	212	9.2		104	64.1	278	122	5142 2082
100	6	20	4	0.3	122	6.2		136	115.0	119	348	5142 2035
	6	38	16	1.1	202	7.0		136	115.0	90	72	5142 2036
	6	46	23	1.6	226	7.9		136	113.0	111	66	5142 2037
	10	20	4	0.3	130	8.6		136	115.0	119	348	5142 2060
	10	28	12	0.9	212	9.9		136	114.0	216	167	5142 2061
	10	38	19	1.3	236	11.0		136	112.0	187	111	5142 2062
	16	12	2	0.2	126	8.9		136	114.0	479	1520	5142 2083
	16	23	10	0.7	214	10.0		136	113.0	415	311	5142 2084
	16	36	20	1.4	258	12.0		135	109.0	300	138	5142 2085
125	6	20	3	0.3	126	8.6		158	160.0	135	548	5142 2038
	6	38	14	1.0	208	9.6		158	159.0	103	112	5142 2039
	6	46	19	1.4	230	11.0		158	157.0	125	104	5142 2040
	10	20	3	0.3	134	12.0		158	160.0	135	548	5142 2063
	10	38	16	1.1	240	15.0		157	155.0	212	175	5142 2065
	16	12	2	0.2	130	12.0		158	158.0	546	2410	5142 2086
	16	28	10	0.7	216	14.0		158	158.0	246	265	5142 2064
	16	36	17	1.2	262	16.0		157	152.0	336	217	5142 2087
150	6	20	3	0.2	126	9.7		186	228.0	155	903	5142 2041
	6	38	12	0.8	208	11.0		186	228.0	119	185	5142 2042
	6	46	16	1.2	230	12.0		186	225.0	143	172	5142 2043
	10	20	3	0.2	134	14.0		186	228.0	155	903	5142 2066
	10	38	14	1.0	240	18.0		186	224.0	243	289	5142 2068
	16	12	2	0.1	130	15.0		186	226.0	632	4002	5142 2088
	16	29	9	0.6	216	16.0		186	226.0	285	440	5142 2067
	16	36	15	1.1	262	20.0		185	219.0	381	357	5142 2089

[1] These figures are either axial or lateral or are vibrations
[2] Deviation ± 30 %

Subject to change without notice

Reduction factors[3] for pressure [K_p] and movement capacity [K_Δ]		
Temperature °C	K_p –	K_Δ –
–10 … 20	1.00	1.00
50	0.92	0.97
100	0.87	0.94
150	0.83	0.92
200	0.79	0.90
250	0.74	0.88
300	0.67	0.86
350	0.60	0.85
400	0.53	0.84

[3] Intermediate values can be linearly interpolated.

The expansion joints are tested by the DVGW to DIN 30 681 and are approved for gas plants.
Marking with the relevant DIN DVGW Reg. No. possible for an additional charge.

Sound absorbing expansion joints

Type BKT-7951 00S
old designation 303/445

Type BKT-7951 DFS
old designation 303/487

Type BKT-7951 00S
Sound-absorbing expansion joint with loose flanges and rim for axial movement capacity or for absorbing all-round vibrations. With external wrapping for structure-borne sound insulation

Type BKT-7951 DFS
Sound-absorbing expansion joint with loose flanges and rim for absorbing vibrations in circular plane. With external wrapping for structural-borne sound insulation and sound insulating supported external restraint.

The expansion joints are supplied with suitable gaskets.

Materials
Bellows and rims: up to DN 50 – 1.4571
from DN 65 – 1.4541
Inner tube: 1.4301 wire mesh
(only up to DN 150)
Flanges and restraint: Carbon steel, zinc-plated
Wrapping: Special rubber
Maximum operating temperature: 200 °C

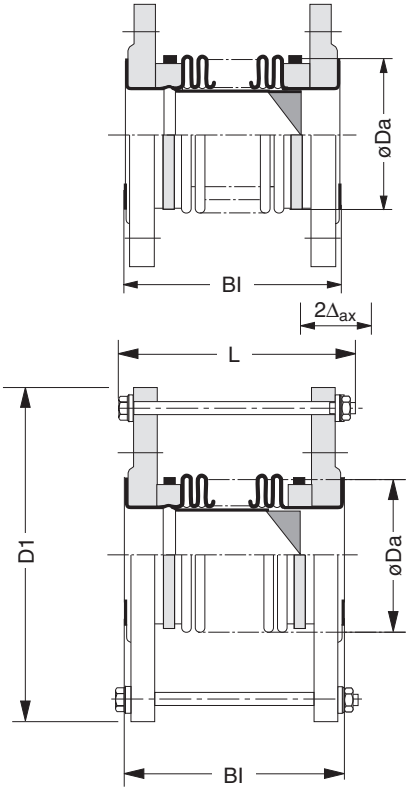

DN	PN	Nominal axial movement capacity ± Δ_{ax} [mm]	All-round vibration[1] ± [mm]	Flange connection dimension	Bellows: Outer diameter Ø Da [mm]	Bellows: Effective cross-section area A_B [cm²]	Bellows: Axial Spring characteristic[2] $C_{ax.}$ [N/mm]	7951 00S: Overall length Bl. [mm]	7951 00S: Weight [kg]	7951 00S: Item no.	7951 DFS Only for vibration absorption: Largest height D1 [mm]	7951 DFS: Longest length L [mm]	7951 DFS: Mass [kg]	7951 DFS: Item no.
20	6	13	0.7	DIN EN 1092-1	34	6.3	45	130	1.3	113 0141	170	160	2.1	113 0167
	10	13	0.7		34	6.3	45	135	1.9	113 0142	185	160	2.8	113 0168
	16	10	0.4		34	6.3	55	120	1.9	113 0143	185	150	2.8	113 0169
25	6	14	0.7		42	9.5	80	140	1.8	113 0144	180	170	2.7	113 0170
	10	14	0.7		42	9.5	80	145	2.4	113 0145	195	170	3.3	113 0171
	16	10	0.4		42	9.5	110	125	2.4	113 0146	195	150	3.3	113 0172
32	6	15	0.7		51	15.0	75	150	2.2	113 0147	200	180	3.1	113 0173
	10	15	0.7		51	15.0	75	155	3.4	113 0148	220	180	4.3	113 0174
	16	11	0.5		51	15.0	95	135	3.4	113 0149	220	160	4.3	113 0175
40	6	15	0.8		58	20.0	100	155	2.5	113 0150	210	180	3.4	113 0176
	10	15	0.8		58	20.0	100	160	3.9	113 0151	230	190	4.8	113 0177
	16	11	0.4		58	20.0	110	140	3.9	113 0152	230	170	4.8	113 0178
50	6	20	1.1		74	32.0	95	180	2.8	113 0153	240	210	4.4	113 0179
	10	20	1.1		74	32.0	95	185	5.4	113 0154	265	220	7.1	113 0180
	16	15	0.6		74	32.0	120	160	5.2	113 0155	265	190	6.8	113 0181
65	6	20	1.1		93	53.0	130	200	4.5	113 0156	260	230	5.8	113 0182
	16	20	1.1		93	53.0	130	205	6.4	113 0157	285	240	9.1	113 0183
80	6	22	1.1		105	68.0	140	200	6.0	113 0158	290	230	8.3	113 0184
	16	22	1.1		105	68.0	140	210	8.0	113 0159	300	240	11.7	113 0185
100	6	22	0.8		130	110.0	160	200	6.6	113 0161	310	230	8.8	113 0187
	16	22	0.8		130	110.0	160	210	8.8	113 0162	320	240	12.5	113 0188
125	6	25	1.1		158	160.0	220	250	10.2	113 0163	340	290	15.0	113 0189
	16	25	1.1		158	160.0	220	260	13.2	113 0164	350	300	20.6	113 0190
150	6	28	1.0		187	230.0	250	250	11.4	113 0165	365	290	16.2	113 0191
	16	28	1.0		187	230.0	250	260	15.8	113 0166	385	300	24.1	113 0192

[1] These figures are either axial or are vibrations
[2] Deviation ± 30 %

Subject to change without notice

Reduction factors[3] for pressure [K_p] and movement capacity [K_Δ]		
Temperature °C	K_p –	K_Δ –
–10 … 120	1.00	1.11
150	0.96	1.07
200	0.88	1.00

[3] Intermediate values can be linearly interpolated.

The expansion joints are tested by the DVGW to DIN 30 681 and are approved for gas plants.
Marking with the relevant DIN DVGW Reg. No. possible for an additional charge (up to DN 150).

Type BOA-ALPHA-C
Vibration absorber with loose flanges and rim for absorbing all-round vibrations.

Type BOA-EPSILON-C
Vibration absorber with loose flanges and rim for absorbing vibrations in circular plane, with sound insulating supported external restraint.

Materials
Multi-layer bellows and rim: 1.4571
Flanges: Carbon steel, zinc-plated
Restraint: Carbon steel, zinc-plated
Absorber discs: Elastomer
(above 120 °C steel cushions)

Allowable working temperature: max 200 °C
(higher temperature available on request)

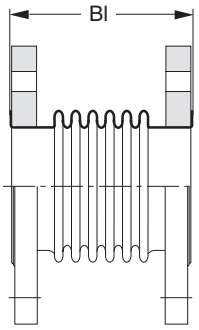

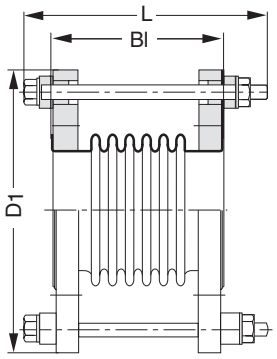

DN	PN	Flange connection dimension	Bellows	BOA-ALPHA-C			BOA-EPSILON-C					
			Effective cross-section area A_B	Overall length Bl.	Weight	Item no.	Largest height D1	Longest length L	Overall length Bl.	Weight	up to 120 °C Item no.	higher than 120 °C Item no.
			[cm²]	[mm]	[kg]		[mm]	[mm]	[mm]	[kg]		
40	6 16	DIN EN 1092-1	27.4 29.8	130 130	2.1 4.3	60000 17300 60000 17301	211 231	188 188	130 130	3.5 5.8	60000 17325 60000 17326	60000 13625 60000 13626
50	6 16		40.7 42.0	130 130	2.6 5.9	60000 17302 60000 17303	221 246	188 188	130 130	3.7 7.3	60000 17327 60000 17328	60000 13627 60000 13628
65	6 16		68.5 70.3	130 130	3.0 7.1	60000 17304 60000 17305	241 266	188 188	130 130	4.5 8.4	60000 17329 60000 17330	60000 13629 60000 13630
80	6 16		86.6 88.6	130 130	5.1 8.5	60000 17306 60000 17307	271 281	188 188	130 130	6.5 11.1	60000 17331 60000 17332	60000 13631 60000 13632
100	6 16		129.4 131.9	130 130	6.1 9.6	60000 17308 60000 17309	291 347	188 210	130 130	7.6 13.7	60000 17333 60000 17334	60000 13633 60000 13634
125	6 16		188.6 191.6	130 130	8.0 13.2	60000 17310 60000 17311	323 377	188 210	130 130	9.7 18.2	60000 17335 60000 17336	60000 13635 60000 13636
150	6 16		266.0 269.3	130 130	11.4 16.1	60000 17312 60000 17313	390 349	210 210	130 130	14.4 23.3	60000 17337 60000 17338	60000 13637 60000 13638
175	6 16		347.0 354.3	130 130	13.5 21.6	5140 3202 5140 3203	420 379	200 200	130 130	18.0 30.0	5140 3227 5140 3228	on request on request
200	6 10 16		437.4 441.8 445.6	130 130 130	15.0 22.6 23.2	5140 3204 5140 3205 5140 3206	445 403 469	200 200 200	130 130 130	19.7 30.8 36.9	5140 3229 5140 3230 5140 3231	on request on request on request
250	6 10 16		662.3 672.4 672.4	130 130 130	19.8 29.0 30.7	5140 3207 5140 3208 5140 3209	438 530 532	200 200 200	130 130 130	28.7 43.0 70.4	5140 3232 5140 3233 5140 3234	on request on request on request
300	6 10 16		928.3 928.3 928.3	130 130 130	27.4 32.7 41.5	5140 3210 5140 3211 5140 3212	503 570 587	200 200 200	130 130 130	35.9 73.2 95.1	5140 3235 5140 3236 5140 3237	on request on request on request

Subject to change without notice

Reduction factors[1] for pressure [K_p] and movement capacity [K_Δ]

Temperature °C	K_p –	K_Δ –
–10 … 20	1.00	1.00
50	0.92	0.97
100	0.87	0.94
150	0.83	0.92
200	0.77	0.90

[1] Intermediate values can be linearly interpolated.

Type BOA-OMIKRON

Vibration absorber for absorbing noises and vibrations. Special type for refrigerating compressors

Materials

Pliable tubing: CuSn 6, double-walled
Braid: 1.4301
Soldering ends: Copper

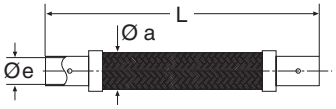

BOA-OMIKRON

Type BOA-JOTA

Vibration absorber with threaded couplings for absorbing low-frequency machine vibrations.

Type BOA-KAPPA

Vibration absorber with threaded couplings for absorbing high-frequency vibrations.

Materials

Pliable tubing: CuSn 1.4541, double-walled
Braid: 1.4301
End sleeves: 1.4301
Threaded coupling: Malleable cast iron, flat sealing (special stainless steel type)

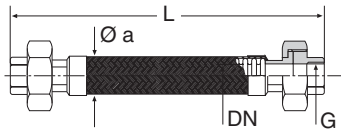

BOA-JOTA, BOA-KAPPA

Allowable operating conditions:

Operating temperature:
max. 300 °C with threaded malleable cast iron coupling
max. 450 °C with threaded stainless steel coupling (special type)

Type BOA-OMIKRON							
DN	Soldering end inner Ø e	Outer Ø hose a	Nominal length L	Operating-pressure	Burst-pressure	Item no.	Weight ± 10 %
	[mm]	[mm]	[mm]	[bar]	[bar]		[kg/m]
8	6.45	12.5	180	80	240	1229110	0.05
10	9.65	15.0	200	65	195	1229111	0.08
15	12.85	19.5	230	65	195	1229112	0.10
15	16.0	22.8	250	65	195	1229113	0.16
20	19.2	27.5	254	60	180	1229114	0.19
20	22.35	27.5	292	60	180	1229115	0.23
25	28.7	35.0	330	55	165	1229116	0.40
32	35.1	43.0	375	45	135	1229117	0.55
40	41.55	50.0	435	35	105	1229118	0.80
50	54.3	64.0	508	30	90	1229119	1.50
65	67.0	79.0	610	30	90	1229120	2.25

Subject to change without notice

				Type BOA-JOTA			Type BOA-KAPPA		
DN	Outer - Ø	Thread	Nominal-pressure	Nominal length	Item no.	Weight	Nominal-length	Item no.	Weight ± 10 %
	[mm]			[mm]		[kg]	[mm]		[kg]
10	15,6	G 3/8	25	250	1229124	0,25	170	1229131	0,21
15	22,5	G 1/2	25	280	1229125	0,46	190	1229132	0,39
20	27,9	G 3/4	25	310	1229126	0,68	210	1229133	0,57
25	33,4	G 1	25	340	1229127	0,96	230	1229134	0,79
32	42,7	G 1 1/4	25	400	1229128	1,60	270	1229135	1,29
40	50,7	G 1 1/2	16	450	1229129	2,12	300	1229136	1,70
50	63,0	G 2	16	500	1229130	3,36	340	1229137	2,65

Subject to change without notice

Type BOA-SIGMA
Vibration absorber with loose flanges for absorbing low-frequency machine vibrations.

Type BOA-OMEGA
Vibration absorber with loose flanges for absorbing high-frequency vibrations.

Materials:
Pliable tubing: CuSn 1.4541, double-walled
Braid: 1.4301
End sleeves: 1.4301
Lapped pipe end: 1.4571
Loose flanges: St 37-2, drilled to PN 16, from DN 200 PN 10 (special stainless steel type)

Allowable operating conditions:
Operating temperature:
max. 350 °C with loose flanges made of steel
max. 450 °C with loose stainless steel flanges (special type)

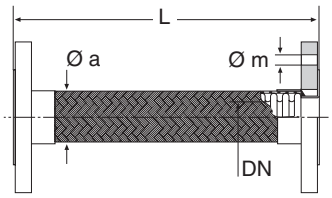

BOA-SIGMA, BOA-OMEGA

				Type BOA-SIGMA			Type BOA-OMEGA		
DN	Outer Ø	flange bore	allowable nominal	Nominal length	Item no.	Weight	Nominal length	Item no.	Weight ± 10 %
	[mm]	PN	pressure	[mm]		[kg]	[mm]		[kg]
40	50.7	16	16	400	1229138	4.3	200	1229147	4.0
50	63.0	16	16	450	1229139	6.1	240	1229148	5.5
65	78.0	16	16	500	1229140	7.8	270	1229149	7.0
80	95.5	16	16	600	1229141	9.8	320	1229150	8.5
100	115.6	16	16	650	1229142	11.7	350	1229151	9.5
125	146.0	16	16	750	1229143	17.1	400	1229152	14.0
150	171.5	16	10	850	1229144	22.0	450	1229153	17.5
200	222.0	10	10	1000	1229146	35.0	520	1229155	27.0
250	281.0	10	6	–0			550	1229156	35.0
300	331.0	10	6	–0			600	1229157	40.0

Subject to change without notice

Rubber expansion joints

with threaded sockets (to DIN 4809)

Type BKT-3160 00S-A-EPDMT Type BKT-3160 00S-D-EPDMT

BOA Group

Type BKT-3160 00S-A-EPDMT and Type BKT-3160 00S-D-EPDMT

Rubber expansion joints with threaded sockets (female thread) for axial or lateral movement capacity or for removing vibrations.

Materials

Bellows: Inner layer EPDM
(Special) nylon cord reinforcement
Outer layer EPDM
Threaded coupling: GGG-40 (zinc-plated)

Allowable operating conditions

Operating pressure:
Overpressure 10 bar
Negative pressure on request
Temperature –10 °C to 110 °C
Test pressure 1.5 times operating pressure

In heating systems to
DIN 4809: 10 bar – max. 100 °C
6 bar – max. 110 °C

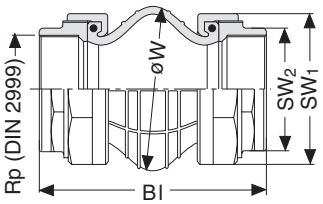

3160 00S-...-EPDMT
Type A

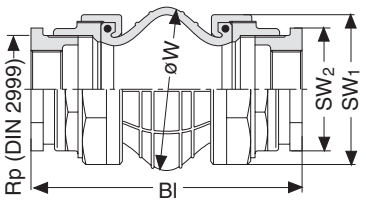

3160 00S-...-EPDMT
Type B

BKT-3160 00S-A-EPDMT

DN	Female thread DIN 2999	DN Bellows	PN	Nominal movement capacity Δ axial expanded	Δ axial compressed	Δ lateral + / –	Overall length Bl.	W	SW_1	SW_2	Type	Item no.
				[mm]	[mm]	[mm]	[mm]	[mm]	[mm]	[mm]		
15	Rp 1/2	40	10	10	25	15	228	75	81	36	B	5142 3809
20	Rp 3/4	40	10	10	25	15	228	75	81	36	B	5142 3810
25	Rp 1	40	10	10	25	15	200	75	81	60	A	5142 3811
32	Rp 1 1/4	40	10	10	25	15	200	75	81	60	A	5142 3812
40	Rp 1 1/2	40	10	10	25	15	200	75	81	60	A	5142 3813
50	Rp 2	50	10	10	25	15	200	95	102	72	A	5142 3814

BKT-3160 00S-D-EPDMT

15	Rp 1/2	40	10	12	25	25	248	75	81	36	B	5142 3976
20	Rp 3/4	40	10	12	25	25	248	75	81	36	B	5142 3977
25	Rp 1	40	10	12	25	25	220	75	81	60	A	5142 3978
32	Rp 1 1/4	40	10	12	25	25	220	75	81	60	A	5142 3979
40	Rp 1 1/2	40	10	12	25	25	220	75	81	60	A	5142 3980
50	Rp 2	50	10	12	25	25	220	96	102	72	A	5142 3981

Subject to change without notice

Bellows colour marking: red – (circle)

Basic recommendation Table on page 22

with threaded sockets

Type BKT-3160 00S-A-…
Type BKT-3160 00S-D-…

Type BKT-3160 00S-A-… and
Type BKT-3160 00S-D-…

Rubber expansion joints with threaded sockets (female thread) for axial or lateral movement capacity or for removing vibrations.

Materials

Bellows: Inner layer EPDM/outer layer EPDM
Inner layer chloroprene/outer layer chloroprene
Inner layer nitrile/outer layer chloroprene
Nylon cord reinforcement
Threaded coupling: GGG-40 (zinc-plated)

Allowable operating conditions

Operating pressure:
Overpressure 10 bar
Negative pressure on request
Temperature –10 °C to 110 °C – EPDM
–10 °C to 90 °C – nitrile
–10 °C to 70 °C – chloroprene
Test pressure 1.5 times operating pressure

Pressure reduction factors

up to 70 °C: 100 % PN
from 70 °C to 110 °C: 70 % PN

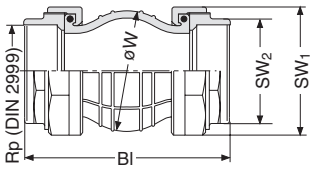

3160 00S-…-…
Type A

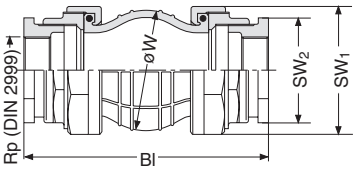

3160 00S-…-…
Type B

BKT-3160 00S-A-EPDM
BKT-3160 00S-A-Chloroprene
BKT-3160 00S-A-Nitrile

DN	Female thread DIN 2999	DN Bellows	PN	Nominal Movement capacity Δ axial expanded	Δ axial compressed	Δ lateral + / –	Overall length Bl.	W	SW_1	SW_2	Type	EPDM Item no.	Chloroprene Item no.	Nitril Item no.
				[mm]	[mm]	[mm]	[mm]	[mm]	[mm]	[mm]				
15	Rp 1/2	40	10	10	25	15	228	75	81	36	B	5142 3785	5142 3793	5142 3801
20	Rp 3/4	40	10	10	25	15	228	75	81	36	B	5142 3786	5142 3794	5142 3802
25	Rp 1	40	10	10	25	15	200	75	81	60	A	5142 3787	5142 3795	5142 3803
32	Rp 1 1/4	40	10	10	25	15	200	75	81	60	A	5142 3788	5142 3796	5142 3804
40	Rp 1 1/2	40	10	10	25	15	200	75	81	60	A	5142 3789	5142 3797	5142 3805
50	Rp 2	50	10	10	25	15	200	95	102	72	A	5142 3790	5142 3798	5142 3806
65	Rp 2 1/2	65	10	10	25	15	200	120	124	88	A	5142 3791	5142 3799	5142 3807
80	Rp 3	80	10	10	25	15	200	130	135	102	A	5142 3792	5142 3800	5142 3808

BKT-3160 00S-D-EPDM
BKT-3160 00S-D-Chloroprene
BKT-3160 00S-D-Nitrile

15	Rp 1/2	40	10	12	25	25	248	75	81	36	B	5142 3968	5142 3982	5142 3990
20	Rp 3/4	40	10	12	25	25	248	75	81	36	B	5142 3969	5142 3983	5142 3991
25	Rp 1	40	10	12	25	25	220	75	81	60	A	5142 3970	5142 3984	5142 3992
32	Rp 1 1/4	40	10	12	25	25	220	75	81	60	A	5142 3971	5142 3985	5142 3993
40	Rp 1 1/2	40	10	12	25	25	220	75	81	60	A	5142 3972	5142 3986	5142 3994
50	Rp 2	50	10	12	25	25	220	96	102	72	A	5142 3973	5142 3987	5142 3995
65	Rp 2 1/2	65	10	12	25	25	220	115	124	88	A	5142 3974	5142 3988	5142 3996
80	Rp 3	80	10	12	25	25	220	130	135	102	A	5142 3975	5142 3989	5142 3997

Subject to change without notice

EPDM bellows: Colour marking: red – (dot)
Chloroprene bellows: Colour marking: black – (dot)
Nitrile bellows: Colour marking: yellow – (dot)

Basic recommendation Table on page 22

Rubber expansion joints

with threaded sockets

Type BKT-3160 00S-B-EPDM

Type BKT-3160 00S-B-EPDM

Rubber expansion joints with threaded sockets (female thread) for axial or lateral movement capacity or for removing vibrations.

Materials

Bellows: Inner layer EPDM
Nylon cord reinforcement
Outer layer EPDM
Threaded coupling:GGG-40 (zinc-plated)

Allowable operating conditions

Operating pressure:
Overpressure 10 bar
Negative pressure on request
Temperature –10 °C to 110 °C – EPDM
Test pressure 1.5 times operating pressure

Pressure reduction factors

up to 70 °C: 100 % PN
from 70 °C to 110 °C: 70 % PN

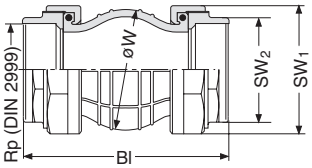

3160 00S-B-EPDM
Type A

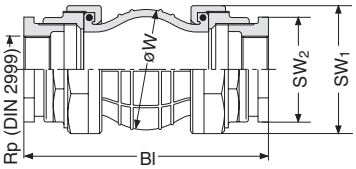

3160 00S-B-EPDM
Type B

DN	Female thread DIN 2999	DN Bellows	PN	Nominal Movement capacity Δ axial expanded	Δ axial compressed	Δ lateral + / –	Overall length Bl.	W	SW_1	SW_2	Type	Item no.
				[mm]	[mm]	[mm]	[mm]	[mm]	[mm]	[mm]		
15	Rp 1/2	40	10	5	8	8	193	70	81	36	B	5142 3777
20	Rp 3/4	40	10	5	8	8	193	70	81	36	B	5142 3778
25	Rp 1	40	10	5	8	8	165	70	81	60	A	5142 3779
32	Rp 1 1/4	40	10	5	8	8	165	70	81	60	A	5142 3780
40	Rp 1 1/2	40	10	5	8	8	165	70	81	60	A	5142 3781
50	Rp 2	50	10	5	8	8	175	92	102	72	A	5142 3782
65	Rp 2 1/2	65	10	6	12	10	190	112	124	88	A	5142 3783
80	Rp 3	80	10	6	12	10	200	124	135	102	A	5142 3784

Subject to change without notice

EPDM bellows: Colour marking: red

Basic recommendation Table on page 23

Type BKT-3140 00S-S-EPDMT

Rubber expansion joints with loose flanges, for axial or lateral movement capacity or for removing vibrations.

Materials

Bellows: Inner layer EPDMT
Aramide reinforcement
Outer layer EPDM
Flanges: Carbon steel, zinc-plated

Allowable operating conditions

Operating pressure:
Overpressure max. 16 bar
Negative pressure on request
Temperature –10 °C to +110 °C
Test pressure 1.5 times operating pressure

In heating systems to DIN 4809:
10 bar – max. 100 °C
6 bar – max. 110 °C

TÜV By Test No. BB6/6611-00
DIN Reg. No. 3 E 015

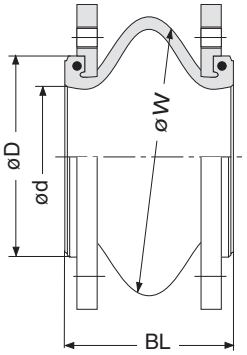

DN	Flange to PN	Bl	nominal movement capacity Δ axial expanded	Δ axial compressed	Δ lateral +/-	Ø W	Ø d	Ø D	Item no.
		[mm]	[mm]	[mm]	[mm]	[mm]	[mm]	[mm]	
25	16	100	10	25	±5	110 110	40 40	69 69	6000002384
32	6 16	100 100	10 10	25 25	±5 ±5	110 110	40 40	69 69	6000002385 6000002386
40	6 16	100 100	10 10	25 25	±5 ±5	110 110	40 40	69 69	6000002358 6000002359
50	6 16	100 100	10 10	25 25	±5 ±5	120 120	50 50	87 87	6000002360 6000002361
65	6 16	100 100	10 10	25 25	±5 ±5	141 141	65 65	109 109	6000002362 6000002363
80	6 16	100 100	10 10	25 25	±5 ±5	150 150	80 80	118 118	6000002364 6000002365
100	6 16	100 100	10 10	25 25	±5 ±5	176 176	100 100	147 147	6000002366 6000002367
125	6 16	100 100	10 10	25 25	±5 ±5	205 205	125 125	177 177	6000002368 6000002369
150	16	100	10	25	±5	233	150	202	6000002370
200	10 16	100 100	10 10	25 25	±5 ±5	290 290	200 200	263 263	6000002371 6000002372

Subject to change without notice

EPDMT bellows: Colour marking: red

Basic recommendation Table on page 22

BOA Group

Type BKT-3140 00S-A-EPDMT

Rubber expansion joint with loose flanges, for axial or lateral movement capacity or for removing vibrations.

Materials

Bellows: Inner layer EPDM
(Special) nylon cord reinforcement
Outer layer EPDM
Flanges: Carbon steel, zinc-plated

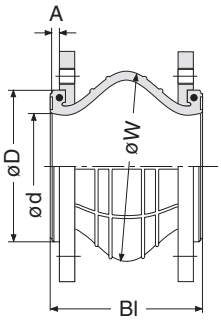

Allowable operating conditions

Operating pressure:
Overpressure max. 16 bar
Negative pressure on request
Temperature –10 °C to 110 °C
Test pressure 1.5 times operating pressure

In heating systems to
DIN 4809: 10 bar – max. 100 °C
6 bar – max. 110 °C

TÜV By Test No. MP4/3827
DIN Reg No. 3 E 010

DN	Flange to PN	Overall length Bl.	Nominal movement capacity Δ axial expanded	Δ axial compressed	Δ lateral + / –	A	Ø W	Ø d	Ø D	Item no.
		[mm]	[mm]	[mm]	[mm]	[mm]	[mm]	[mm]	[mm]	
25	6 10/16	130 130	10 10	25 25	15 15	6.5 6.5	70 70	29 29	64 64	5142 3720 5142 3721
32	6 10/16	130 130	10 10	25 25	15 15	6.5 6.5	70 70	29 29	64 64	5142 3722 5142 3723
40	6 10/16	130 130	10 10	25 25	15 15	8 8	75 75	36 36	69 69	5142 3724 5142 3725
50	6 10/16	130 130	10 10	25 25	15 15	8.5 8.5	95 95	47.5 47.5	87 87	5142 3726 5142 3727
65	6 10/16	130 130	10 10	25 25	15 15	9 9	120 120	60 60	109 109	5142 3728 5142 3729
80	6 10/16	130 130	10 10	25 25	15 15	8.5 8.5	130 130	75 75	118 118	5142 3730 5142 3731
100	6 10/16	130 130	15 15	25 25	15 15	11.5 11.5	150 150	96 96	147 147	5142 3732 5142 3733
125	6 10/16	130 130	15 15	25 25	15 15	12.5 12.5	180 180	120 120	177 177	5142 3734 5142 3735
150	10/16	130	15	25	15	13	204	143	202	5142 3736
200	10 16	130 130	15 15	25 25	15 15	15.5 15.5	256 256	191 191	263 263	5142 3737 5142 3738
250	10 16	130 130	15 15	15 15	15 15	16.5 16.5	310 310	243.5 243.5	323 323	5142 3739 5142 3740

Subject to change without notice

EPDMT bellows: Colour marking: red – (circle)

Basic recommendation Table on page 22

Type BKT-3140 00S-D-EPDMT

Rubber expansion joint with loose flanges, for axial or lateral movement capacity or for removing vibrations.

Materials

Bellows: Inner layer EPDM
(Special) nylon cord reinforcement
Outer layer EPDM
Flanges: Carbon steel, zinc-plated

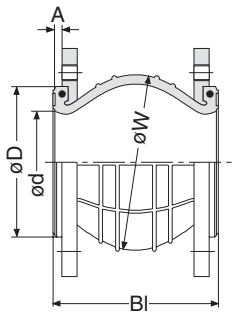

Allowable operating conditions

Operating pressure:
Overpressure max. 16 bar
Negative pressure on request
Temperature –10 °C to 110 °C
Test pressure 1.5 times operating pressure

In heating systems to
DIN 4809: 10 bar – max. 100 °C
6 bar – max. 110 °C

TÜV By Test No. MP4/3827
DIN Reg No. 3 E 010

DN	Flange to PN	Overall length Bl.	Nominal movement capacity Δ axial expanded	Δ axial compressed	Δ lateral + / –	A	Ø W	Ø d	Ø D	Item no.
		[mm]	[mm]	[mm]	[mm]	[mm]	[mm]	[mm]	[mm]	
40	6 10/16	150 150	12 12	25 25	25 25	6.5 6.5	75 75	34.5 34.5	69 69	5142 3910 5142 3911
50	6 10/16	150 150	12 12	25 25	25 25	7 7	96 96	46 46	87 87	5142 3912 5142 3913
65	6 10/16	150 150	12 12	25 25	25 25	7.5 7.5	115 115	66 66	109 109	5142 3914 5142 3915
80	6 10/16	150 150	12 12	25 25	25 25	7 7	130 130	73.5 73.5	118 118	5142 3916 5142 3917
100	6 10/16	150 150	12 12	25 25	25 25	8.5 8.5	154 154	99 99	147 147	5142 3918 5142 3919
125	6 10/16	150 150	12 12	25 25	25 25	11 11	176 176	124 124	177 177	5142 3920 5142 3921
150	10/16	150	12	25	25	11.5	200	142	202	5142 3923
200	10 16	150 150	12 12	25 25	25 25	14 14	252 252	195 195	263 263	5142 3924 5142 3925
250	10 16	200 200	12 12	25 25	25 25	15 15	317 317	246 246	323 323	5142 3926 5142 3927

Subject to change without notice

EPDMT bellows: Colour marking: red – (circle)

Basic recommendation Table on page 22

Type BKT-3140 00S-A-…

BOA Group

Rubber expansion joint with loose flanges, for axial or lateral movement capacity or for removing vibrations.

Materials

Bellows: Inner layer EPDM/outer layer EPDM
Inner layer EPDM-SAN/outer layer EPDM-SAN
Inner layer chloroprene/outer layer chloroprene
Inner layer nitrile/outer layer chloroprene
Nylon cord reinforcement
Flanges: Carbon steel, zinc-plated

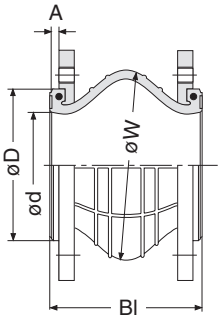

Allowable operating conditions

Operating pressure:
Overpressure max. 16 bar
Negative pressure on request
Temperature –10 °C to 110 °C – EPDM
–10 °C to 90 °C – nitrile
–10 °C to 70 °C – chloroprene
Test pressure 1.5 times operating pressure

Pressure reduction factors

up to 70 °C: 100 % PN
from 70 °C to 110 °C: 70 % PN

BKT-3140 00S-A-EPDM
BKT-3140 00S-A-Nitrile
BKT-3140 00S-A-Chloroprene
BKT-3140 00S-A-EPDM-SAN

DN	Flange to PN	Overall length Bl.	Nominal movement capacity Δ axial expanded	Nominal movement capacity Δ axial compressed	Nominal movement capacity Δ lateral + / –	A	Ø W	Ø d	Ø D	EPDM Item no.	EPDM/SAN Item no.	Nitrile Item no.	Chloroprene Item no.
		[mm]	[mm]	[mm]	[mm]	[mm]	[mm]	[mm]	[mm]				
25	6 10/16	130 130	10 10	25 25	15 15	6.5 6.5	70 70	29 29	64 64	5142 3566 5142 3595		5142 3568 5142 3564	5142 3567 5142 3563
32	6 10/16	130 130	10 10	25 25	15 15	6.5 6.5	70 70	29 29	64 64	5142 4119 5142 4120		5142 4163 5142 4164	5142 4141 5142 4142
40	6 10/16	130 130	10 10	25 25	15 15	8 8	75 75	36 36	69 69	5142 4121 5142 4122		5142 4165 5142 4166	5142 4143 5142 4144
50	6 10/16	130 130	10 10	25 25	15 15	8.5 8.5	95 95	47.5 47.5	87 87	5142 4123 5142 4124		5142 4167 5142 4168	5142 4145 5142 4146
65	6 10/16	130 130	10 10	25 25	15 15	9 9	120 120	60 60	109 109	5142 4125 5142 4126		5142 4169 5142 4170	5142 4147 5142 4148
80	6 10/16	130 130	10 10	25 25	15 15	8.5 8.5	130 130	75 75	118 118	5142 4127 5142 4128		5142 4171 5142 4172	5142 4149 5142 4150
100	6 10/16	130 130	10 10	25 25	15 15	11.5 11.5	150 150	96 96	147 147	5142 4129 5142 4130		5142 4173 5142 4174	5142 4151 5142 4152
125	6 10/16	130 130	15 15	25 25	15 15	12.5 12.5	180 180	120 120	177 177	5142 4131 5142 4132		5142 4175 5142 4176	5142 4153 5142 4154
150	10/16	130	15	20	15	13	204	143	202	5142 4133	On request	5142 4177	5142 4155
200	10 16	130 130	15 15	25 25	15 15	15.5 15.5	256 256	191 191	263 263	5142 4134 5142 3650		5142 4178 5142 3656	5142 4156 5142 3653
250	10 16	130 130	15 15	15 15	15 15	16.5 16.5	310 310	243.5 243.5	323 323	5142 4135 5142 3651		5142 4179 5142 3657	5142 4157 5142 3654
300	10 16	130 130	15 15	15 15	15 15	15.5 15.5	357 357	290.5 290.5	372 372	5142 4136 5142 3652		5142 4180 5142 3658	5142 4158 5142 3655
350	10 16	200 200	25 25	35 35	15 15	16 16	425 425	338 338	422 422	5142 4137 5142 3831		5142 4181 5142 3835	5142 4159 5142 3839
400	10 16	200 200	25 25	35 35	15 15	16.5 16.5	474 474	388 388	479 479	5142 4138 5142 3832		5142 4182 5142 3836	5142 4160 5142 3840
450	10 16	200 200	25 25	35 35	15 15	17.5 17.5	521 521	438 438	525 525	5142 4139 5142 3833		5142 4183 5142 3837	5142 4161 5142 3841
500	10 16	200 200	25 25	35 35	15 15	17.5 17.5	569 569	484 484	576 576	5142 4140 5142 3834		5142 4184 5142 3838	5142 4162 5142 3842

Subject to change without notice

EPDM bellows: Colour marking: red – (dot)
Chloropren bellows: Colour marking: black – (dot)
Nitrile bellows: Colour marking: yellow/white – (dot)
EPDM-SAN bellows: Colour marking: red/blue – (dot)

Basic recommendation Table on page 22

Type BKT-3140 00S-D-…

Rubber expansion joint with loose flanges, for axial or lateral movement capacity or for removing vibrations.

Materials

Bellows: Inner layer EPDM/outer layer EPDM
Inner layer EPDM-SAN/outer layer EPDM-SAN
Inner layer chloroprene/outer layer chloroprene
Inner layer nitrile/outer layer chloroprene
Nylon cord reinforcement
Flanges: Carbon steel, zinc-plated
Restraint: Carbon steel, zinc-plated (with rubber mount)

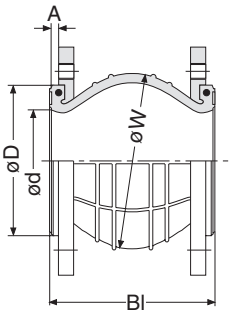

Allowable operating conditions

Operating pressure:
Overpressure max. 16 bar
Negative pressure on request
Temperature –10 °C to 110 °C – EPDM
–10 °C to 90 °C – nitrile
–10 °C to 70 °C – chloroprene
Test pressure 1.5 times operating pressure

Pressure reduction factors

up to 70 °C: 100 % PN
from 70 °C to 110 °C: 70 % PN

DN	Flange to PN	Overall length Bl.	Nominal Movement capacity Δ axial expanded	Δ axial compressed	Δ lateral + / –	A	Ø W	Ø d	Ø D	EPDM Item no.	EPDM/SAN Item no.	Nitrile Item no.	Chloroprene Item no.
		[mm]	[mm]	[mm]	[mm]	[mm]	[mm]	[mm]	[mm]				
40	6 10/16	150 150	12 12	25 25	25 25	6.5 6.5	75 75	34.5 34.5	69 69	5142 3890 5142 3891	On request	5154 0500 5154 0501	5154 0519 5154.0520
50	6 10/16	150 150	12 12	25 25	25 25	7 7	96 96	46 46	87 87	5142 3892 5142 3893		5154 0502 5154 0503	5154 0521 5154 0522
65	6 10/16	150 150	12 12	25 25	25 25	7.5 7.5	115 115	66 66	109 109	5142 3894 5142 3895		5154 0504 5154 0505	5154 0523 5154 0524
80	6 10/16	150 150	12 12	25 25	25 25	7 7	130 130	73.5 73.5	118 118	5142 3896 5142 3897		5154 0506 5154 0507	5154 0525 5154 0526
100	6 10/16	150 150	12 12	25 25	25 25	8.5 8.5	154 154	99 99	147 147	5142 3898 5142 3899		5154 0508 5154 0509	5154 0527 5154 0528
125	6 10/16	150 150	12 12	25 25	25 25	11 11	176 176	124 124	177 177	5142 3900 5142 3901		5154 0510 5154 0511	5154 0529 5154 0530
150	10/16	150	12	25	25	11.5	200	142	202	5142 3903		5154 0512	5154 0531
200	10 16	150 150	12 12	25 25	25 25	14 14	252 252	195 195	263 263	5142 3904 5142 3905		5154 0513 5154 0514	5154 0532 5154 0533
250	10 16	200 200	12 12	25 25	25 25	15 15	317 317	246 246	323 323	5142 3906 5142 3907		5154 0515 5154 0516	5154 0534 5154 0535
300	10 16	200 200	12 12	25 25	25 25	14 14	366 366	295 295	372 372	5142 3908 5142 3909		5154 0517 5154 0518	5154 0536 5154 0537

Subject to change without notice

EPDM bellows: Colour marking: red – (dot)
Chloropren bellows: Colour marking: black – (dot)
Nitrile bellows: Colour marking: yellow/white – (dot)
EPDM-SAN bellows: Colour marking: red/blue – (dot)

Basic recommendation Table on page 22

BOA Group

Type BKT-3140 00S-B-EPDM

Rubber expansion joint with loose flanges, for axial or lateral movement capacity or for removing vibrations.

Materials

Bellows: Inner layer EPDM
Nylon cord reinforcement
Outer layer EPDM
Flanges: Carbon steel, zinc-plated

Allowable operating conditions

Operating pressure:
Overpressure max. 16 bar up to DN 300
max. 10 bar from DN 350
Negative pressure on request
Temperature –10 °C to 110 °C
Test pressure 1.5 times operating pressure

Pressure reduction factors

up to 70 °C: 100 % PN
from 70 °C to 110 °C: 70 % PN

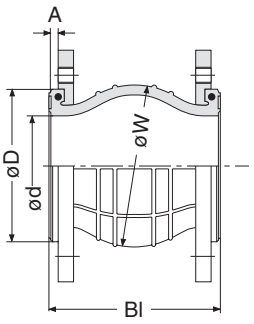

DN	Flange to PN	Overall length Bl.	Nominal movement capacity Δ axial expanded	Δ axial compressed	Δ lateral + / –	A	Ø W	Ø d	Ø D	Item no.
		[mm]	[mm]	[mm]	[mm]	[mm]	[mm]	[mm]	[mm]	
32	6 10/16	95 95	5 5	8 8	8 8	8 8	70 70	33 33	69 69	5142 4075 5142 4076
40	6 10/16	95 95	5 5	8 8	8 8	8 8	70 70	33 33	69 69	5142 4077 5142 4078
50	6 10/16	105 105	5 5	8 8	8 8	8.5 8.5	92 92	44.5 44.5	87 87	5142 4079 5142 4080
65	6 10/16	115 115	6 6	12 12	10 10	9 9	112 112	65 65	109 109	5142 4081 5142 4082
80	6 10/16	130 130	6 6	12 12	10 10	8.5 8.5	124 124	75 75	118 118	5142 4083 5142 4084
100	6 10/16	135 135	10 10	18 18	12 12	11.5 11.5	149 149	94 94	147 147	5142 4085 5142 4086
125	6 10/16	170 170	10 10	18 18	12 12	12.5 12.5	185 185	119 119	177 177	5142 4087 5142 4088
150	10/16	180	10	18	12	13	209	140	202	5142 4089
200	10 16	205 205	14 14	25 25	22 22	15.5 15.5	252 252	188 188	263 263	5142 4090 5142 4414
250	10 16	240 240	14 14	25 25	22 22	16.5 16.5	318 318	236 236	323 323	5142 4091 5142 4415
300	10 16	260 260	14 14	25 25	22 22	15.5 15.5	364 364	287 287	372 372	5142 4092 5142 4416
350	10	295	16	25	22	13	422	335	422	5142 4093
400	10	310	16	25	22	15	474	385	479	5142 4094
450	10	335	16	25	22	16	525	435	525	5142 4095
500	10	350	16	25	22	17	576	480	576	5142 4096

Subject to change without notice

EPDM bellows: Colour marking: red

Basic recommendation Table on page 23

Type BKT-3840 DFS-S-EPDMT

Rubber expansion joint with loose flanges and noise-insulating, supported external restraint, for lateral movement capacity or for removing vibrations.

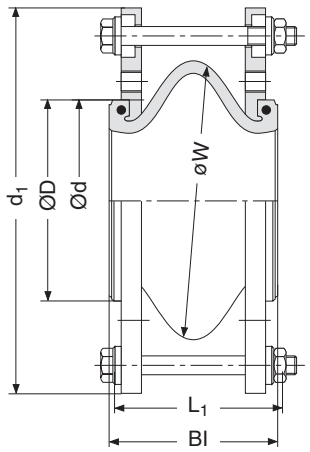

Materials

Bellows: Inner layer EPDMT
ARAMIDE reinforcement
Outer layer EPDM
Flanges: Carbon steel, zinc-plated
Restraint: Carbon steel, zinc-plated

Allowable operating conditions

Operating pressure:
Overpressure max. 16 bar
Negative pressure on request
Temperature –10 °C to +110 °C
Test pressure 1.5 times operating pressure

In heating systems to DIN 4809:
10 bar – max. 100 °C
6 bar – max. 110 °C

TÜV By Test No. BB6/6611-00
DIN Reg. No. 3 E 015

DN	Flange to PN	Bl	nominal movement capacity Δ lateral +/-	Ø W	Ø d	Ø D	with restraint L_1	with restraint Ø d_1	Item no.
		[mm]	[mm]	[mm]	[mm]	[mm]	[mm]	[mm]	
25	16	100	±5 ±5					215	6000002389
32	6 16	100 100	±5 ±5	110 110	40 40	69 69	138 138	205 220	6000002390 6000002391
40	6 16	100 100	±5 ±5	110 110	40 40	69 69	138 138	225 245	6000002392 6000002393
50	6 16	100 100	±5 ±5	120 120	50 50	87 87	138 138	225 270	6000002394 6000002395
65	6 16	100 100	±5 ±5	141 141	65 65	109 109	138 138	265 290	6000002396 6000002397
80	6 16	100 100	±5 ±5	150 150	80 80	118 118	138 138	295 305	6000002398 6000002399
100	6 16	100 100	±5 ±5	176 176	100 100	147 147	138 138	315 325	6000002400 6000002401
125	6 16	100 100	±5 ±5	205 205	125 125	177 177	138 170	345 375	6000002402 6000002403
150	16	100	±5	233	150	202	170	410	6000002404
200	10 16	100 100	±5 ±5	290 290	200 200	263 263	170 170	465 465	6000002405 6000002406

Subject to change without notice

EPDMT bellows: Colour marking: red

Basic recommendation Table on page 22

BOA Group

Type BKT-3840 DFS-A-EPDMT

Rubber expansion joint with loose flanges and noise-insulating, supported tie-rod restraint, for lateral movement capacity or for removing vibrations.

Materials

Bellows:	Inner layer EPDM (Special) nylon cord reinforcement Outer layer EPDM
Flanges:	Carbon steel, zinc-plated
Restraint:	Carbon steel, zinc-plated (with rubber bedding)

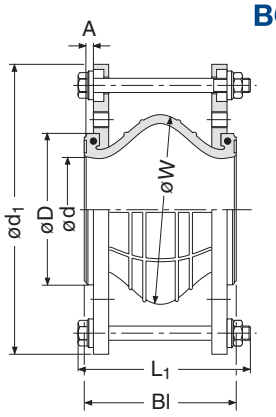

Allowable operating conditions

Operating pressure:
Overpressure max. 16 bar
Negative pressure on request
Temperature –10 °C to 110 °C
Test pressure 1.5 times operating pressure

In heating systems to
DIN 4809: 10 bar – max. 100 °C
6 bar – max. 110 °C

TÜV By Test No. MP4/3827
DIN Reg No. 3 E 010

DN	Flange to PN	Overall length Bl. [mm]	Nominal movement capacity + / – [mm]	A [mm]	Ø W [mm]	Ø d [mm]	Ø D [mm]	L_1 [mm]	Ø d_1 [mm]	Item no.
25	6 10/16	130 130	15 15	6.5 6.5	70 70	29 29	64 64	168 168	200 215	5142 3741 5142 3742
32	6 10/16	130 130	15 15	6.5 6.5	70 70	29 29	64 64	168 168	220 240	5142 3743 5142 3744
40	6 10/16	130 130	15 15	8 8	75 75	36 36	69 69	168 168	230 250	5142 3745 5142 3746
50	6 10/16	130 130	15 15	8.5 8.5	95 95	47.5 47.5	87 87	168 168	240 265	5142 3747 5142 3748
65	6 10/16	130 130	15 15	9 9	120 120	60 60	109 109	168 168	260 285	5142 3749 5142 3750
80	6 10/16	130 130	15 15	8.5 8.5	130 130	75 75	118 118	168 168	290 300	5142 3751 5142 3752
100	6 10/16	130 130	15 15	11.5 11.5	150 150	96 96	147 147	168 168	310 320	5142 3753 5142 3754
125	6 10/16	130 130	15 15	12.5 12.5	180 180	120 120	177 177	168 170	340 370	5142 3755 5142 3756
150	10/16	130	15	13	204	143	202	170	405	5142 3757
200	10 16	130 130	15 15	15.5 15.5	256 256	191 191	263 263	170 170	460 460	5142 3758 5142 3759
250	10 16	130 130	15 15	16.5 16.5	310 310	243.5 243.5	323 323	170 170	545 555	5142 3760 5142 3761

Subject to change without notice

EPDMT bellows: Colour marking: red – (circle)

Basic recommendation Table on page 22

Type BKT-3840 DFS-D-EPDMT

Rubber expansion joint with loose flanges and noise-insulating, supported tie-rod restraint, for lateral movement capacity or for removing vibrations.

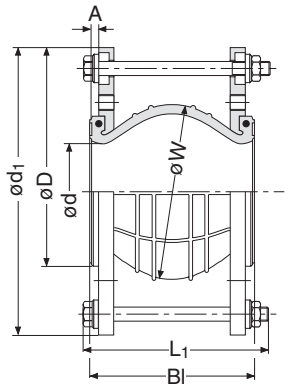

Materials

Bellows:	Inner layer EPDM (Special) nylon cord reinforcement Outer layer EPDM
Flanges:	Carbon steel, zinc-plated
Restraint:	Carbon steel, zinc-plated (with rubber bedding)

Allowable operating conditions

Operating pressure:
Overpressure max. 16 bar
Negative pressure on request
Temperature –10 °C to 110 °C
Test pressure 1.5 times operating pressure

In heating systems to
DIN 4809: 10 bar – max. 100 °C
6 bar – max. 110 °C

TÜV By Test No. MP4/3827
DIN Reg No. 3 E 010

DN	Flange to PN	Overall length Bl.	Nominal movement capacity + / –	A	Ø W	Ø d	Ø D	L_1	Ø d_1	Item no.
		[mm]	[mm]	[mm]	[mm]	[mm]	[mm]	[mm]	[mm]	
40	6 10/16	150 150	25 25	6.5 6.5	75 75	34.5 34.5	69 69	188 188	230 250	5142 3948 5142 3949
50	6 10/16	150 150	25 25	7 7	96 96	46 46	87 87	188 188	240 265	5142 3950 5142 3951
65	6 10/16	150 150	25 25	7.5 7.5	115 115	66 66	109 109	188 188	260 285	5142 3952 5142 3953
80	6 10/16	150 150	25 25	7 7	130 130	73.5 73.5	118 118	188 188	290 300	5142 3954 5142 3955
100	6 10/16	150 150	25 25	8.5 8.5	154 154	99 99	147 147	188 188	310 320	5142 3956 5142 3957
125	6 10/16	150 150	25 25	11 11	176 176	124 124	177 177	188 190	340 370	5142 3958 5142 3959
150	10/16	150	25	11.5	200	142	202	190	405	5142 3961
200	10 16	150 150	25 25	14 14	252 252	195 195	263 263	190 190	460 460	5142 3962 5142 3963
250	10 16	200 200	25 25	15 15	317 317	246 246	323 323	250 250	545 555	5142 3964 5142 3965

Subject to change without notice

EPDMT bellows: Colour marking: red – (circle)

Basic recommendation Table on page 22

with flanges and tie-rod restraint

Type BKT-3840 DFS-A-…

BKT-3840 DFS-A-EPDM
BKT-3840 DFS-A-Nitrile
BKT-3840 DFS-A-Chloroprene
BKT-3140 00S-A-EPDM-SAN

Typ BKT-3840 DFS-A-…

Rubber expansion joint with loose flanges and noise-insulating, supported tie-rod restraint, for lateral movement capacity or for removing vibrations.

BOA Group

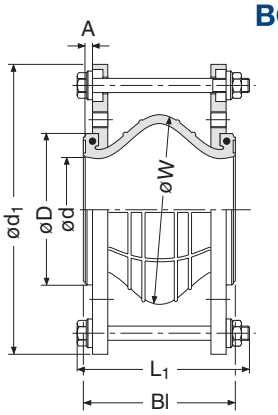

Materials

Bellows: Inner layer EPDM/outer layer EPDM
Inner layer EPDM-SAN/outer layer EPDM-SAN
Inner layer chloroprene/outer layer chloroprene
Inner layer nitrile/outer layer chloroprene
Nylon cord reinforcement
Flanges: Carbon steel, zinc-plated
Restraint: Carbon steel, zinc-plated (with rubber mount)

Allowable operating conditions

Operating pressure:
Overpressure max. 16 bar
Negative pressure on request
Temperature –10 °C to 110 °C – EPDM
–10 °C to 90 °C – nitrile
–10 °C to 70 °C – chloroprene
Test pressure 1.5 times operating pressure

Pressure reduction factors

up to 70 °C: 100 % PN
from 70 °C to 110 °C: 70 % PN

DN	Flange to PN	Overall length Bl.	Nominal movement capacity Δ lateral + / –	A	Ø W	Ø d	Ø D	L_1	Ø d_1	EPDM Item no.	EPDM-SAN Item no.	Nitrile Item no.	Chloroprene Item no.
		[mm]	[mm]	[mm]	[mm]	[mm]	[mm]	[mm]	[mm]				
25	6 10/16	130 130	15 15	6.5 6.5	70 70	29 29	64 64	168 168	200 215	5142 3574 5142 3570		5142 3576 5142 3572	5142 3575 5142 3571
32	6 10/16	130 130	15 15	6.5 6.5	70 70	29 29	64 64	168 168	220 240	5142 4263 5142 4264		5142 4319 5142 4320	5142 4291 5142 4292
40	6 10/16	130 130	15 15	8 8	75 75	36 36	69 69	168 168	230 250	5142 4265 5142 4266		5142 4321 5142 4322	5142 4293 5142 4294
50	6 10/16	130 130	15 15	8.5 8.5	95 95	47.5 47.5	87 87	168 168	240 265	5142 4267 5142 4269		5142 4323 5142 4325	5142 4295 5142 4297
65	6 10/16	130 130	15 15	9 9	120 120	60 60	109 109	168 168	260 285	5142 4270 5142 4272		5142 4326 5142 4328	5142 4298 5142 4300
80	6 10/16	130 130	15 15	8.5 8.5	130 130	75 75	118 118	168 168	290 300	5142 4273 5142 4275		5142 4329 5142 4331	5142 4301 5142 4303
100	6 10/16	130 130	15 15	11.5 11.5	150 150	96 96	147 147	168 168	310 320	5142 4276 5142 4278		5142 4332 5142 4334	5142 4304 5142 4306
125	6 10/16	130 130	15 15	12.5 12.5	180 180	120 120	177 177	168 170	340 370	5142 4279 5142 4281		5142 4335 5142 4337	5142 4307 5142 4309
150	10/16	130	15	13	204	143	202	170	405	5142 4283	On request	5142 4339	5142 4311
200	10 16	130 130	15 15	15.5 15.5	256 256	191 191	263 263	170 170	460 460	5142 4284 5142 3662		5142 4340 5142 3668	5142 4312 5142 3665
250	10 16	130 130	15 15	16.5 16.5	310 310	243.5 243.5	323 323	170 170	545 555	5142 4285 5142 3663		5142 4341 5142 3669	5142 4313 5142 3666
300	10 16	130 130	15 15	15.5 15.5	357 357	290.5 290.5	372 372	170 183	595 620	5142 4286 5142 3664		5142 4342 5142 3670	5142 4314 5142 3667
350	10 16	200 200	15 15	16 16	425 425	338 338	422 422	253 263	665 680	5142 4287 5142 3847		5142 4343 5142 3851	5142 4315 5142 3855
400	10 16	200 200	15 15	16.5 16.5	474 474	388 388	479 479	253 253	725 740	5142 4288 5142 3848		5142 4344 5142 3852	5142 4316 5142 3856
450	10 16	200 200	15 15	17.5 17.5	521 521	438 438	525 525	253 253	775 800	5142 4289 5142 3849		5142 4345 5142 3853	5142 4317 5142 3857
500	10 16	200 200	15 15	17.5 17.5	569 569	484 484	576 576	253 253	830 875	5142 4290 5142 3850		5142 4346 5142 3854	5142 4318 5142 3858

Subject to change without notice

EPDM bellows: Colour marking: red – (dot)
Chloropren bellows: Colour marking: black – (dot)
Nitrile bellows: Colour marking: yellow/white – (dot)
EPDM-SAN bellows: Colour marking: red/blue – (dot)

Basic recommendation Table on page 22

Type BKT-3840 DFS-D-…

Rubber expansion joint with loose flanges and noise-insulating, supported tie-rod restraint, for lateral movement capacity or for removing vibrations.

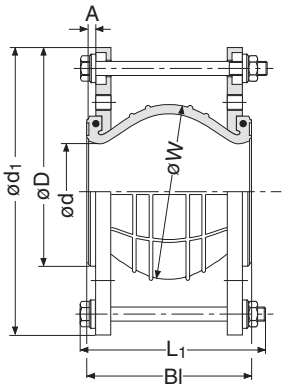

Materials

Bellows: Inner layer EPDM/outer layer EPDM
Inner layer EPDM-SAN/outer layer EPDM-SAN
Inner layer chloroprene/outer layer chloroprene
Inner layer nitrile/outer layer chloroprene
Nylon cord reinforcement
Flanges: Carbon steel, zinc-plated
Restraint: Carbon steel, zinc-plated (with rubber mount)

Allowable operating conditions

Operating pressure:
Overpressure max. 16 bar
Negative pressure on request
Temperature –10 °C to 110 °C – EPDM
–10 °C to 90 °C – nitrile
–10 °C to 70 °C – chloroprene
Test pressure 1.5 times operating pressure

Pressure reduction factors

up to 70 °C: 100 % PN
from 70 °C to 110 °C: 70 % PN

DN	Flange to PN	Overall length Bl.	Nominal movement capacity Δ lateral + / –	A	Ø W	Ø d	Ø D	L_1	Ø d_1	EPDM Item no.	EPDM-SAN Item no.	nitrile Item no.	chloroprene Item no.
		[mm]	[mm]	[mm]	[mm]	[mm]	[mm]	[mm]	[mm]				
40	6 10/16	150 150	25 25	6.5 6.5	75 75	34.5 34.5	69 69	188 188	230 250	5142 3928 5142 3929	On request	5154 0538 5154 0539	5154 0557 5154 0558
50	6 10/16	150 150	25 25	7 7	96 96	46 46	87 87	188 188	240 265	5142 3930 5142 3931		5154 0540 5154 0541	5154 0559 5154 0560
65	6 10/16	150 150	25 25	7.5 7.5	115 115	66 66	109 109	188 188	260 285	5142 3932 5142 3933		5154 0542 5154 0543	5154 0561 5154 0562
80	6 10/16	150 150	25 25	7 7	130 130	73.5 73.5	118 118	188 188	290 300	5142 3934 5142 3935		5154 0544 5154 0545	5154 0563 5154 0564
100	6 10/16	150 150	25 25	8.5 8.5	154 154	99 99	147 147	188 188	310 320	5142 3936 5142 3937		5154 0546 5154 0547	5154 0565 5154 0566
125	6 10/16	150 150	25 25	11 11	176 176	124 124	177 177	188 190	340 370	5142 3938 5142 3939		5154 0548 5154 0549	5154 0567 5154 0568
150	10/16	150	25	11.5	200	142	202	190	405	5142 3941		5154 0550	5154 0569
200	10 16	150 150	25 25	14 14	252 252	195 195	263 263	190 190	460 460	5142 3942 5142 3943		5154 0551 5154 0552	5154 0570 5154 0571
250	10 16	200 200	25 25	15 15	317 317	246 246	323 323	250 250	545 555	5142 3944 5142 3945		5154 0553 5154 0554	5154 0572 5154 0573
300	10 16	200 200	25 25	14 14	366 366	295 295	372 372	250 253	595 620	5142 3946 5142 3947		5154 0555 5154 0556	5154 0574 5154 0575

Subject to change without notice

EPDM bellows: Colour marking: red – (dot)
Chloroprene bellows: Colour marking: black – (dot)
Nitrile bellows: Colour marking: yellow/white – (dot)
EPDM-SAN bellows: Colour marking: red/blue – (dot)

Basic recommendation Table on page 22

BKT-3840 DFS-D-EPDM
BKT-3840 DFS-D-Nitrile
BKT-3840 DFS-D-Chloroprene
BKT-3140 00S-D-EPDM-SAN

BOA Group

Type BKT-3840 DFS-B-EPDM

Rubber expansion joint with loose flanges and noise-insulating, supported tie-rod restraint, for lateral movement capacity or for removing vibrations.

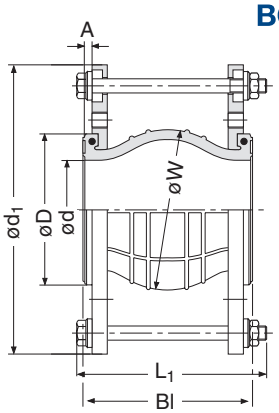

Materials

Bellows:	Inner layer EPDM Nylon cord reinforcement Outer layer EPDM
Flanges:	Carbon steel, zinc-plated
Restraint:	Carbon steel, zinc-plated (with rubber mount)

Allowable operating conditions

Operating pressure:
Overpressure max. 16 bar up to DN 300
max. 10 bar from DN 350
Negative pressure on request
Temperature –10 °C to 110 °C
Test pressure 1.5 times operating pressure

Pressure reduction factors

up to 70 °C: 100 % PN
from 70 °C to 110 °C: 70 % PN

DN	Flange to PN	Overall length Bl.	Nominal movement capacity Δ lateral + / –	A	Ø W	Ø d	Ø D	L_1	Ø d_1	Item no.
		[mm]	[mm]	[mm]	[mm]	[mm]	[mm]	[mm]	[mm]	
32	6 10/16	95 95	8 8	8 8	70 70	33 33	69 69	128 128	220 240	5142 4207 5142 4208
40	6 10/16	95 95	8 8	8 8	70 70	33 33	69 69	128 128	230 250	5142 4209 5142 4210
50	6 10/16	105 105	8 8	8.5 8.5	92 92	44.5 44.5	87 87	148 148	240 265	5142 4211 5142 4213
65	6 10/16	115 115	10 10	9 9	112 112	65 65	109 109	148 148	260 285	5142 4214 5142 4216
80	6 10/16	130 130	10 10	8.5 8.5	124 124	75 75	118 118	168 168	290 300	5142 4217 5142 4219
100	6 10/16	135 135	12 12	11.5 11.5	149 149	94 94	147 147	168 168	310 320	5142 4220 5142 4222
125	6 10/16	170 170	12 12	12.5 12.5	185 185	119 119	177 177	208 210	340 370	5142 4223 5142 4225
150	10/16	180	12	13	209	140	202	220	405	5142 4227
200	10 16	205 205	22 22	15.5 15.5	252 252	188 188	263 263	250 250	460 460	5142 4228 5142 4405
250	10 16	240 240	22 22	16.5 16.5	318 318	236 236	323 323	280 280	545 555	5142 4229 5142 4406
300	10 16	260 260	22 22	15.5 15.5	364 364	287 287	372 372	300 313	595 620	5142 4230 5142 4407
350	10	295	22	13	422	335	422	363	665	5142 4231
400	10	310	122	15	474	385	479	363	725	5142 4232
450	10	335	22	16	525	435	525	403	775	5142 4233
500	10	350	22	17	576	480	576	403	830	5142 4234

Subject to change without notice

EPDM bellows: Colour marking: red

Basic recommendation Table on page 23

Type IGMV

Rubber / metal pipe joint with vulcanised steel flanges, suitable for noise reduction.

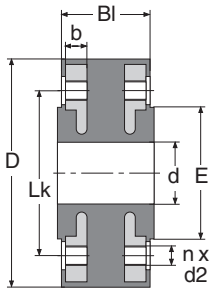

Materials

Rubber body: EPDM
Steel flange: St 37-2

Allowable operating conditions

Operating pressure: max. 10 bar
Temperature: 100 °C

TÜV test No. BB6/6612-00

DN	Flange to PN	Overall length Bl.	b	Ø E	Ø d	Ø D	Bolt hole circle Ø (LK)	Number of threaded holes (n)	Thread (d_2)	Item no.
		[mm]	[mm]	[mm]	[mm]	[mm]	[mm]	[mm]	[mm]	
20	6 10	70 70	10 14	47 55	20 20	90 105	65 75	4 4	M 10 M 12	6000010614 6000002603
25	6 10	70 70	12 14	57 65	25 25	100 115	75 85	4 4	M 10 M 12	6000010615 6000002604
32	6 10	70 70	12 14	70 76	32 32	120 140	90 100	4 4	M 12 M 16	6000010616 6000002605
40	6 10	70 70	12 16	80 86	40 40	130 150	100 110	4 4	M 12 M 16	6000010617 6000002606
50	6 10	70 70	12 16	90 101	50 50	140 165	110 125	4 4	M 12 M 16	6000010618 6000002607
65	6 10	70 70	12 16	110 121	65 65	160 185	130 145	4 4	M 12 M 16	6000010619 6000002608
80	6 10	70 70	14 18	126 136	80 80	190 200	150 160	4 8	M 16 M 16	6000010620 6000002609
100	6 10	70 70	14 18	144 154	100 100	210 220	170 180	4 8	M 16 M 16	6000010621 6000002610
125	6 10	70 70	14 18	174 184	125 125	240 250	200 210	8 8	M 16 M 16	6000010622 6000002611
150	6 10	70 70	14 18	199 210	150 150	265 285	225 240	8 8	M 16 M 20	6000010623 6000002612
200	6 10	70 70	16 20	254 265	200 200	320 340	280 295	8 8	M 16 M 20	6000010624 6000002613

Subject to change without notice

Type SP 10

Annularly corrugated hose for use in sprinkler systems or as vibration absorber for pumps and compressors, use in gas, sanitary and heating installation, in fire safety and solar engineering and in air conditioning.

BOA Group

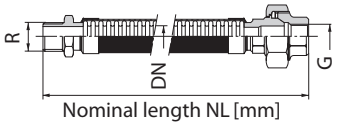

Materials

Corrugated metal hose: 1.4541
Braid: 1.4301
Nipple with male thread to DIN 2999/1: Malleable cast iron
Threaded coupling with female thread to DIN / ISO 228/1: Malleable cast iron

Allowable operating conditions

Operating temperature: max. 300 °C

DIN DVGW test mark,
VdS approved

Size DN	Thread	Nominal pressure PN *)	Nominal length [mm]	Weight [kg]	Item no.
10	R 3/8 A G 3/8	25	300* 500* 1000*	0.20 0.26 0.41	1 228 013 1 228 014 1 228 015
12	R 1/2 A G 1/2	25	300* 500* 1000*	0.25 0.31 0.47	1 228 004 1 228 005 1 228 006
20	R 3/4 A G 3/4	25	500* 750* 1000*	0.55 0.67 0.79	1 228 016 1 228 017 1 228 018
25	R 1 A G 1	25	500* 750* 1000*	0.80 0.95 1.10	1 228 007 1 228 019 1 228 008
32	R 1 1/4 A G 1 1/4	25	500* 750* 1000*	1.30 1.52 1.75	1 228 020 1 228 021 1 228 022
40	R 1 1/2 A G 1 1/2	25	500* 750* 1000*	1.45 1.75 2.03	1 228 009 1 228 023 1 228 010
50	R 2 A G 2	25	500* 750* 1000*	2.40 2.90 3.35	1 228 011 1 228 024 1 228 012

* available from stock, other lengths available at short notice
*) for gas applications, allowable operating pressure to DIN 3384

Subject to change without notice

Type SP 20

Type SP 20

Annularly corrugated hose for use in sprinkler systems, as a vibration absorber for pumps and compressors, use in gas, sanitary and heating installation, in fire safety and solar engineering and in air conditioning.

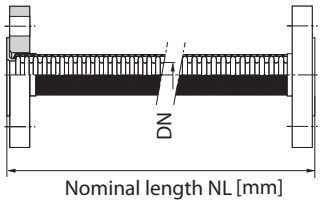

Materials

Corrugated metal hose: 1.4541
Braid: 1.4301
Loose flange PN 16: St 37

Allowable operating conditions

Operating temperature: max. 300 °C

DIN DVGW test mark,
VdS approved

Size DN	Nominal pressure PN	Nominal length [mm]	Weight [kg]	Item no.
20	16	500* 750* 1000*	1.85 2.00 2.10	1 228 110 1 228 111 1 228 112
25	16	500* 750* 1000*	2.70 2.85 3.00	1 228 102 1 228 113 1 228 103
32	16	500* 750* 1000*	3.55 3.80 4.00	1 228 114 1 228 115 1 228 116
40	16	600* 1000* 1500*	4.20 4.60 5.25	1 228 118 1 228 119 1 228 105
50	16	600* 1000* 1500*	5.40 6.10 7.05	1 228 120 1 228 121 1 228 122
65	16	750* 1000* 1500*	7.20 7.80 8.95	1 228 123 1 228 124 1 228 107
80	16	750* 1000* 1500*	9.00 9.90 11.70	1 228 125 1 228 126 1 228 107
100	16	750* 1000* 1500*	9.95 11.15 13.50	1 228 128 1 228 129 1 228 130

* available from stock, other lengths available at short notice

Subject to change without notice

Type *mapress* Type “Sanitär”

Type *mapress*
Annularly corrugated hose for use in sanitary installation.

BOA Group

Materials
Corrugated metal hose: 1.4541
Braid: 1.4301
Mannesmann press fittings: “Sanitary” type made of stainless steel

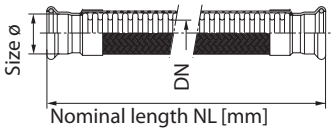

Allowable operating conditions
Operating temperature: max. 110 °C

Size DN	Pipe dimension, outer Ø x s [mm]	Nominal pressure PN	Nominal length [mm]	Weight [kg]	Item no.
10	12 x 1.2	16	300* 500* 750*	0.20 0.25 0.34	not available
12	15 x 1.2	16	300* 500* 750*	0.20 0.28 0.38	1 228 081 1 228 082 1 228 083
15	18 x 1.2	16	300* 500* 750*	0.20 0.30 0.40	1 228 084 1 228 085 1 228 086
20	22 x 1.5	16	300* 500* 750*	0.25 0.35 0.45	1 228 087 1 228 088 1 228 089
25	28 x 1.5	16	300* 500* 750* 1000	0.30 0.50 0.70 0.90	1 228 090 1 228 091 1 228 092 1 228 093
32	35 x 1.5	16	300* 500* 750* 1000*	0.40 0.65 0.90 1.20	1 228 094 1 228 095 1 228 096 1 228 097
40	42 x 1.5	16	300* 500* 750* 1000*	0.70 1.10 1.50 1.90	made to order only
50	54 x 1.5	16	300* 500* 750* 1000*	0.90 1.40 1.90 2.50	made to order only

* available from stock, other lengths available at short notice

Subject to change without notice

Type: annularly corrugated tubing "MITUBE"

Pliable installation pipe, lightweight, parallel corrugation, available in lengths up to 40 m, with threaded couplings easy to install without additional tools, consisting of: Inserts, gasket, union nut.

Materials

Pliable tubing:	1.4571
Inserts:	1.4305
Union nut:	Brass
Gasket:	EPDM

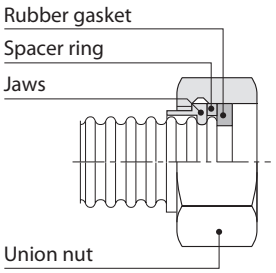

Nominal size DN [mm]	Inner Ø D_1 [mm]	Outer Ø D_2 [mm]	Bend radius [mm]	Union nut [–]	Design pressure [bar]	Weight per metre [kg/m]	Item no.
8	7.7	10.7	45	G 3/8	10	0.09	Q 1 229 100*
							Installation set**
12	11.6	14.8	30	G 1/2	10	0.12	Q 1 229 102*
							Installation set**
15	14.7	18.8	30	G 3/4	10	0.15	Q 1 229 104*
							Installation set**
16	16.5	20.2	30	G 3/4	10	0.17	Q 1 229 106*
							Installation set**
20	21.3	25.4	90	G 1	10	0.26	Q 1 229 108*
							Installation set**

*) Minimum purchase 100 m of each nominal size, available within 5 working days.

Subject to change without notice

**) The installation set contains 10 complete connection kits, consisting of:

10 union nuts
20 inserts
10 spacer rings
10 gaskets

Type: annularly corrugated tubing "MITUBE"

Safety instructions

- Fix anchor points and pipe guide supports before filling and pressure testing the plant or system.
- The expansion joint must not be subjected to twisting (torsion). This is especially applicable to the installation of expansion joints with socket connection.
- This does not apply to types BKT-7918 … and BKT-7928 …, which have built-in torsion protection as a standard feature.
- Protect the steel bellows from damage and dirt (e.g. weld splatter, gypsum and mortar splashes).
- Lay steam pipes so that water hammers cannot occur. – This can be achieved through adequate drainage, insulation and by avoiding water pockets and by laying the pipes with a gradient.
- In the case of expansion joints with inner sleeves, note the flow direction.
- The installation of expansion joints in the immediate vicinity of pressure reducers, superheated steam coolers and shut-down valves should be avoided, if turbulence-induced high-frequency vibrations are to be expected, or special measures must be taken (e.g. installation of thick-walled inner sleeves, perforated discs, steadying zones).
- If high-frequency vibrations, turbulence or high flow velocities are to be expected in the fluid, we recommend the installation of expansion joints with inner sleeve.
- If DN ≧ 150, we recommend the installation of expansion joints with inner sleeve if the flow velocity of air gas or steam exceeds 8 m/s and the flow velocity of liquid exceeds 3 m/s.

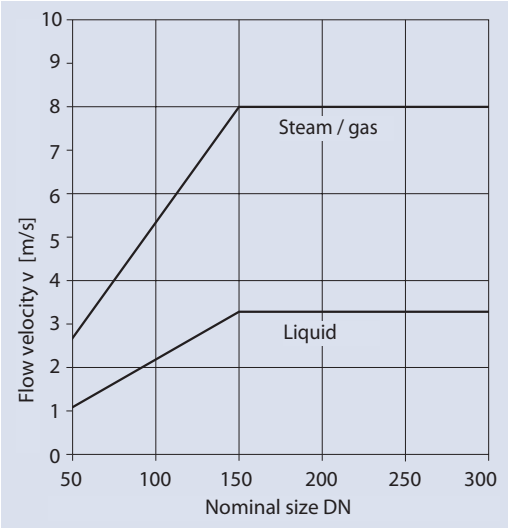

- **Installation of expansion joints with sockets in gas pipes:**
  - Due to the bolted connection, an operating pressure of only 4 bar maximum is allowed for installation in gas pipes.
  - Rubber gaskets must not be oiled or greased.
  - Oxygen pipes must not be allowed to come into contact with oil or grease. – Otherwise there is a risk of explosion!

- Provide gradient for drainage.
- Align pipe on all sides along the centre line: note the spacing of the pipe guide supports.

NOTE
Sliding or roller bearings to protect against buckling and lifting up of the pipe are the safest means of pipe support.

IMPORTANT
Cradle-mounted suspension anchors are not allowed in the area of expansion joints!

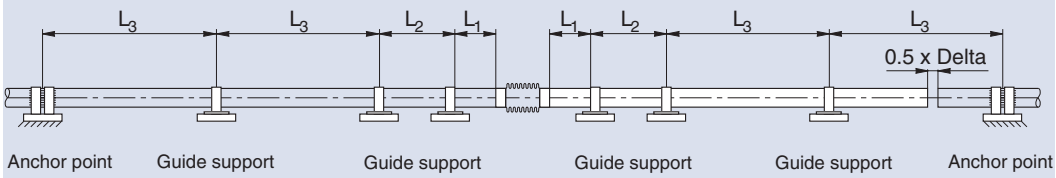

L_1 = max. 2 · DN + $\frac{\Delta}{2}$ [mm]

L_2 = 0.7 · L_3 [mm]

L_3 = 400 $\sqrt{DN}$ [mm] (guide value)

Δ = movement capacity of the expansion joint [mm]

L_3 equals the support spacing according to the formula above. If buckling of the pipe is to be expected, L3 must be reduced as shown in the following diagram.

DN	L_1 mm	L_2 mm	L_3 mm
15	30 + $\Delta/2$	1050	1550
20	40 + $\Delta/2$	1200	1750
25	50 + $\Delta/2$	1400	2000
32	64 + $\Delta/2$	1550	2250
40	80 + $\Delta/2$	1750	2500
50	100 + $\Delta/2$	1950	2800
65	130 + $\Delta/2$	2250	3200
80	160 + $\Delta/2$	2500	3550
100	200 + $\Delta/2$	2800	4000
125	250 + $\Delta/2$	3100	4450
150	300 + $\Delta/2$	3450	4900

DN	L_1 mm	L_2 mm	L_3 mm
200	400 + $\Delta/2$	3950	5650
250	500 + $\Delta/2$	4400	6300
300	600 + $\Delta/2$	4850	6900
350	700 + $\Delta/2$	5200	7450
400	800 + $\Delta/2$	5600	8000
450	900 + $\Delta/2$	5900	8450
500	1000 + $\Delta/2$	6250	8900
600	1200 + $\Delta/2$	6850	9800
700	1400 + $\Delta/2$	7450	10600
800	1600 + $\Delta/2$	7900	11300

(Only applies to steel pipes)

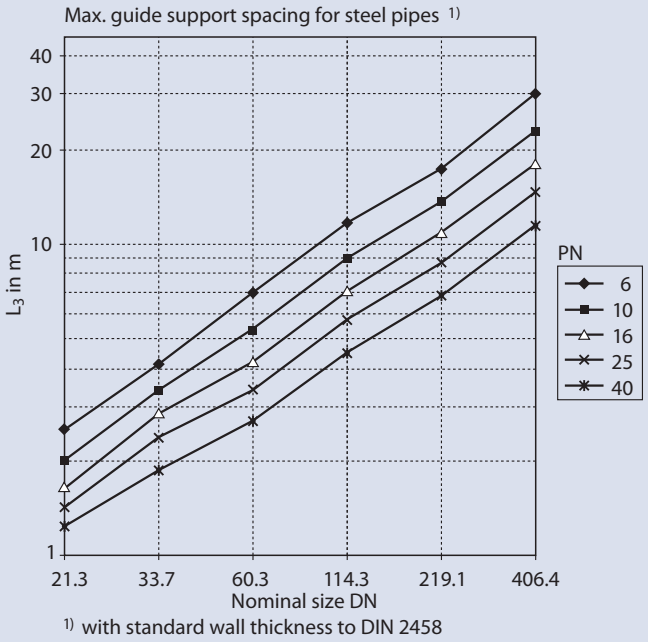

1) with standard wall thickness to DIN 2458

Anchor points

- Install main anchor points at the pipe bend (angular deflection).
- Use anchor point to limit each pipe length to be counterbalanced.
  - Only one expansion joint may be installed between two anchor points.
  - Misalignments in the pipes are fitted with main anchor points. These must absorb the reaction forces of the expansion joints and the frictional forces of the guide supports.
  - Intermediate anchor points are required if the installation of an axial expansion joint in long pipe runs is no longer sufficient to take up the pipe expansion that occurs and several axial expansion joints have to be provided.
  - In case of vacuum operation, the anchor points must be suitable for absorbing tension and compression forces.

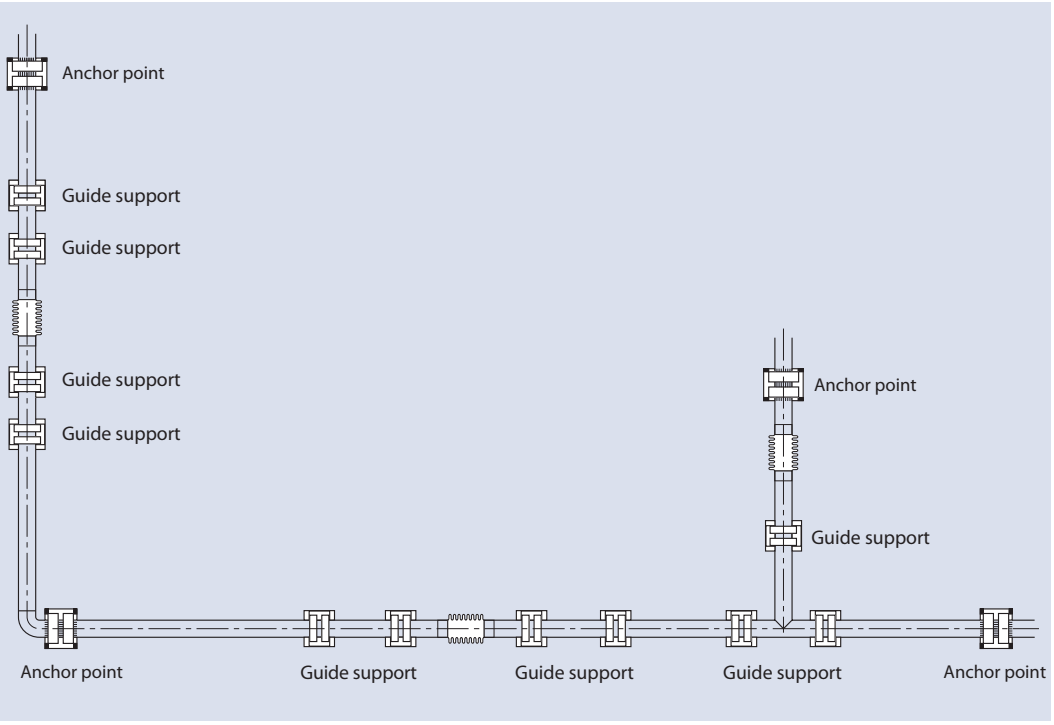

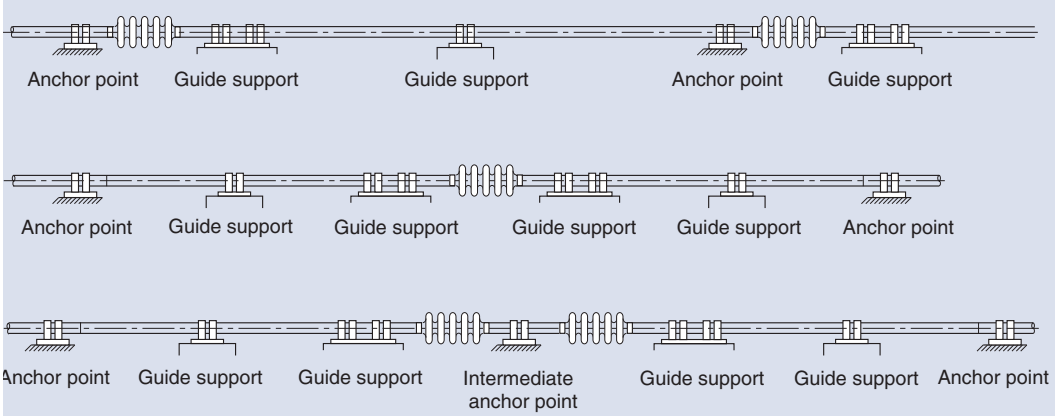

Vibration compensation

- Wherever possible, mount the expansion joint directly on the vibrating unit.
- Position an anchor point directly behind the expansion joint. Install without pre-stressing.

IMPORTANT
If using unrestrained vibration absorbers the reaction force must also be taken into account.

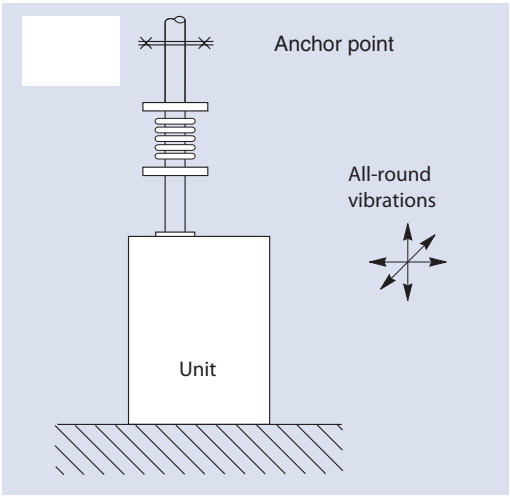

Movement capacity

NOTE
The max. allowable movement capacity is given on the expansion joint. It is based on 1000 life cycles. For larger numbers of cycles until failure the movement capacity must be reduced by the duty cycle factor KL given in the table.

Duty cycles N_{zul}	Number of cycles to failure K_L
1000	1.00
2000	0.82
3000	0.73
5000	0.63
10000	0.51
30000	0.37
50000	0.32
100000	0.26
200000	0.22
1000000	0.14
25000000	0.05

$$K_L = (1000 / N_{zul})^{0.29}$$

Operating pressure

HINWEIS
The allowable operating pressure results from the nominal pressure taking into account the reduction factors given in the “axial expansion joints, technical data” brochure.

- At higher temperatures, reduce the nominal pressure according to the reduction factors.

Prestressing

All standard expansion joints must be installed prestressed with 50 % of the movement capacity (for heat-carrying pipes, overall length plus 50 % and for cold-carrying pipes, overall length minus 50 % expansion).

If heat-carrying pipes are not installed at their lowest operating temperature and cold-carrying pipes are not installed at their highest operating temperature (e.g. repair on a still hot pipe), individual prestressing must be carried out. (See prestress diagram)

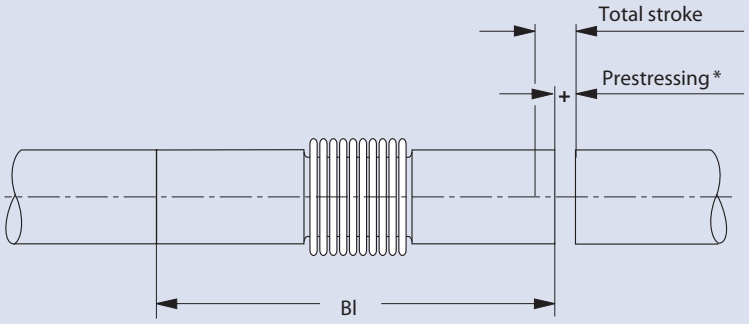

* not applicable to prestressed expansion joints

Expansion joints delivered prestressed

The following expansion joints are already **50 % prestressed and are suitable for movement capacity without prestressing:**

50 % prestressed

BKT-7114 00X
BKT-7124 00X
BKT-7117 00X
BKT-7127 00X

suitable for Δ_{ax} without prestressing

BKT-7112 00X
BKT-7122 00X
BKT-7119 00X
BKT-7129 00X
BKT-7179 00X-ME
BKT-7179 00X-MS
BKT-7170 00X-ME
BKT-7918 00X
BKT-7928 00X
BKT-7160 00S
BKT-7162 00S

IMPORTANT
The anchor points of the pipe must be securely anchored before the metal prestressing plate is unlocked.

- Following installation and commissioning, remove the metal prestressing plate (locking of the prestressing). – Ensure that
  – the expansion joint does not become damaged
  – no separating or abrasive particles come into contact with the bellows

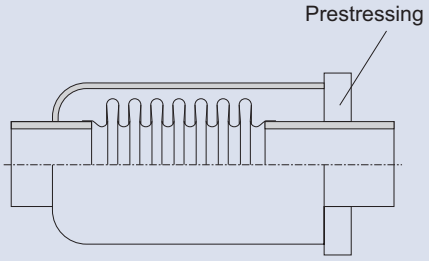

Prestress diagram

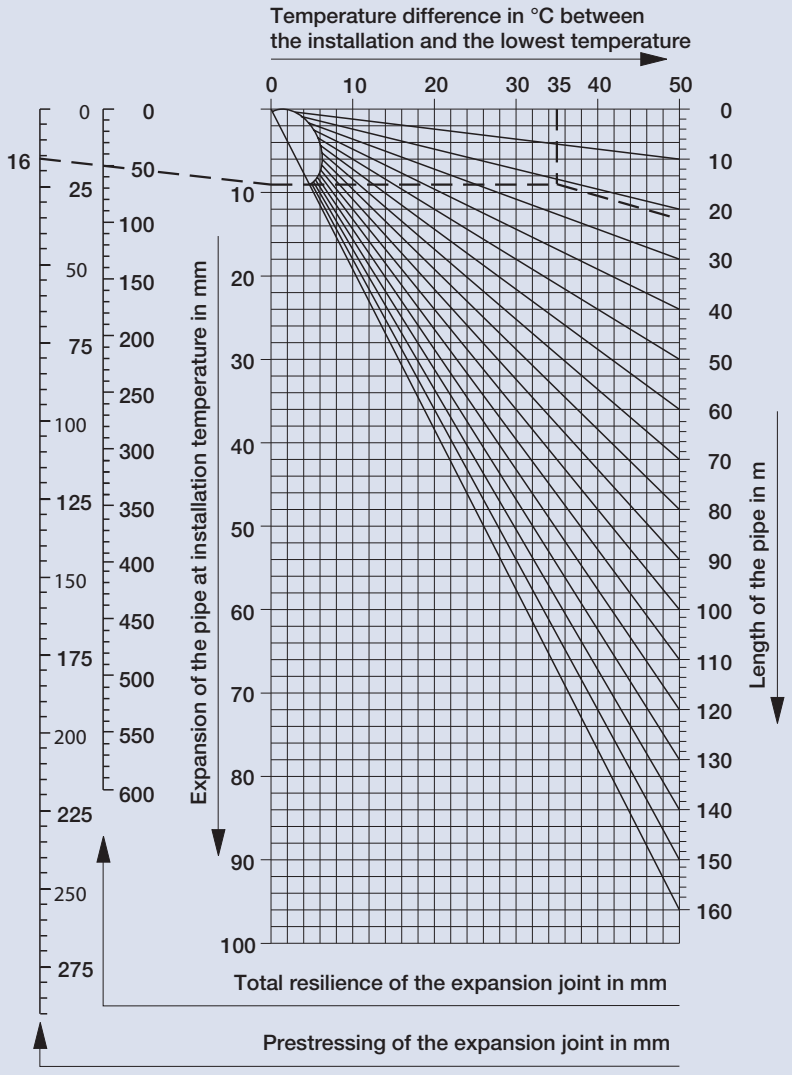

Applicable to pipes made of St 35

Example of use of the diagram

An axial expansion joint is ordered for a 22 m long pipe. Lowest temperature –15 oC. Highest temperature +165 oC. Largest expansion at 180 oC, heating = 50 mm. The expansion joint should be prestressed by 50 % of this expansion = 25 mm, i.e. pulled apart. During operation it is pressed together by the remaining 50 % = 25 mm. During installation particular attention must be paid to the prestressing. The temperature at the time of installation is not –15 oC, but +20 oC. This results in a corresponding expansion of the pipe of 9 mm, by which the expansion joint is to be less prestressed:

25–9 = 16 mm.

The prestress diagram for determining the prestressing enables this value to be determined immediately without intermediate calculation:

1. Temperature difference between installation temperature and lowest temperature
   –15 °C ÷ +20 °C = 35 °C.
2. Length of the pipe run to be compensated = 22 m.
3. Draw a straight line from the point “22 m pipe length” in the direction of the point “0 oC”.
4. Draw a perpendicular line from the point “35 oC” up to the ray starting from “22 m”.
5. Draw a horizontal line from this point of intersection to the line of “expansion of the pipe in mm”, as given above, the resulting dimension is 9 mm.
6. Connect “9 mm” point with “total resilience” = 50 mm and extend the connecting straight line up to where it intersects the line of “expansion joint prestressing in mm”.

The prestressing is 16 mm. The axial expansion joint must be pulled apart by this amount during installation.

Installing expansion joint with flange

- Install pipe axes and flange holes aligned with each other
  - Flanges must be parallel
  - The gasket must sit centrally
  - Tighten bolts crosswise.
- Ensure that the expansion joint is not subjected to torsion during installation.
- Following installation, check that the convolutions of the bellows do not contain dirt.

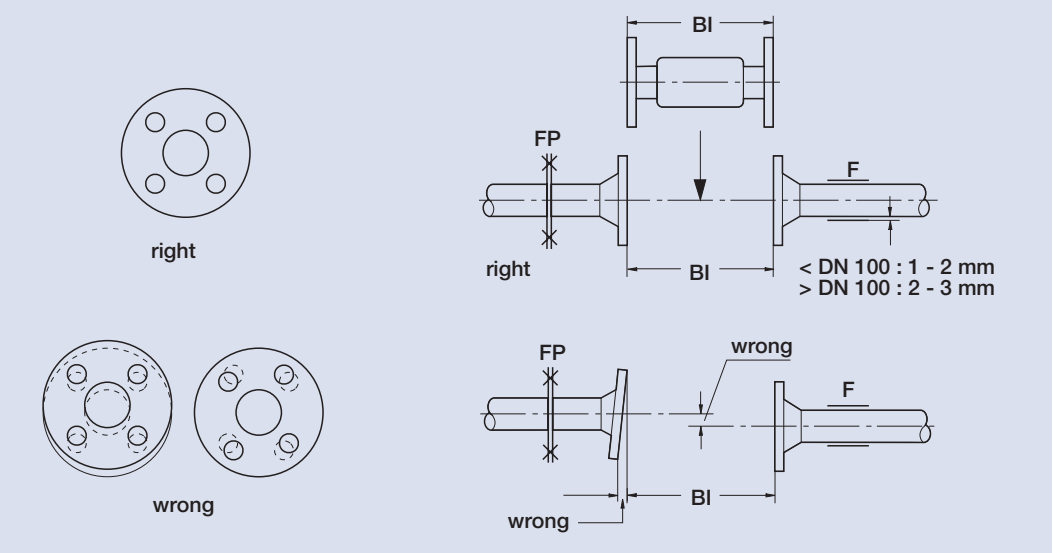

Installing Mapress expansion joints

Axial expansion joints Type BKT-7179 00X and BKT-7170 00S are suitable for absorbing axial expansions in straight pipes and have been especially developed for the Mapress system.

Connection fittings welded on on both sides enable fast and clean installation on site.

The connection fittings are welded on in compliance with the strict specifications of Mapress.

The Mapress working and laying guidelines for pipes and press fittings made of unalloyed steel / heating and stainless steel / sanitary must always be noted and followed.

- Install pipe axes in alignment with each other.
- Ensure that the expansion joint is not subjected to torsion during installation.
- Following installation, check that the convolutions of the bellows do not contain dirt.

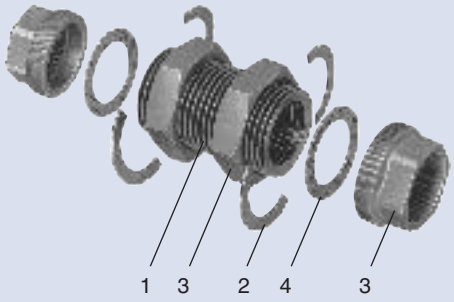

7160 00S -TI, -RI, -EI, -TA, -RA, -LF

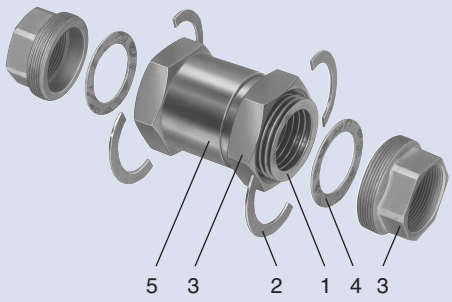

7162 00S -TI, -RI, -EI, -TA, -RA, -LF

1 Bellows: Stainless steel, Material type 1.4571
2 Retaining rings: Stainless steel, Material type 1.4301
3 Threaded coupling: Type T: Malleable cast iron, zinc-plated
Type R: Gunmetal
Type E: Stainless steel, Material type 1.4571
Typ LF: Soldering fitting
4 Gasket: Klinger C-4400
5 Outer sleeve: Type T: Carbon steel, zinc-plated, soft soldered
Type R: Brass, soft soldered
Type E: Stainless steel
Type L: Brass, soft soldered

Type BKT-7160 00S + BKT-7162 00S –

Connection:
TI – (malleable cast iron, female thread)
TA – (malleable cast iron, male thread)
RI – (gunmetal, female thread)
RA– (gunmetal, male thread)
EI – (stainless steel, female thread)
LF – (soldering fitting)

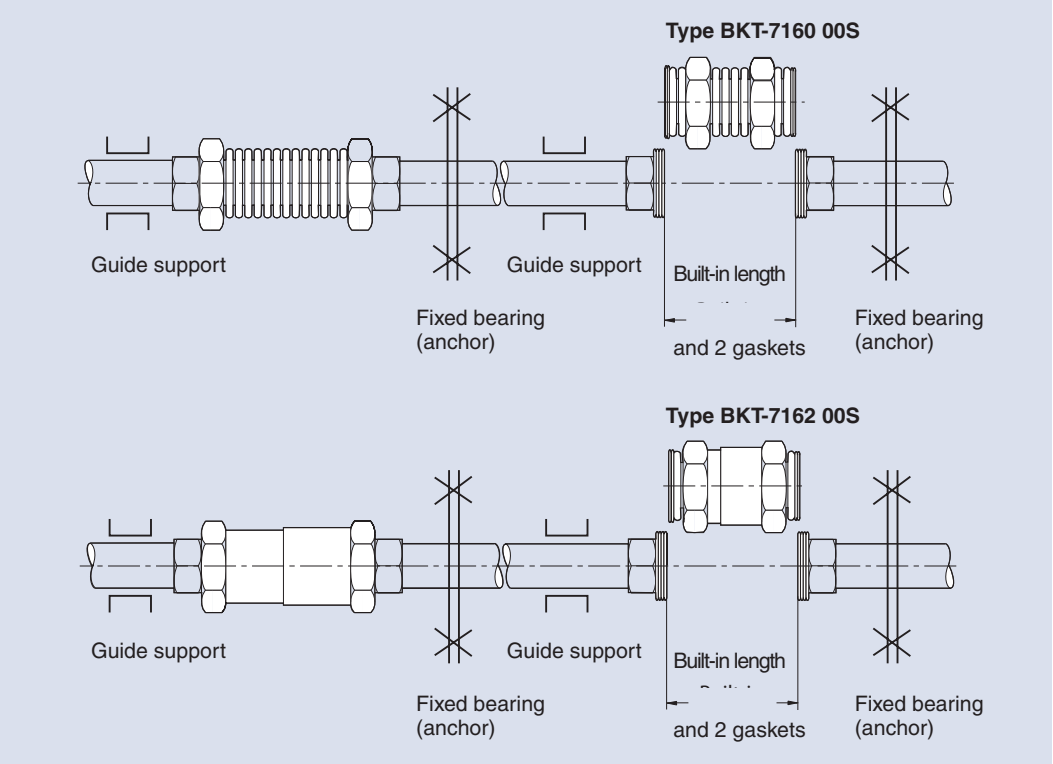

Installation of BOA disassembly joint

NOTE

The built-in length *EL* of the disassembly joint, depending on the nominal size, should be max. 20–30 mm longer than the unrestrained total length *TL ung*.

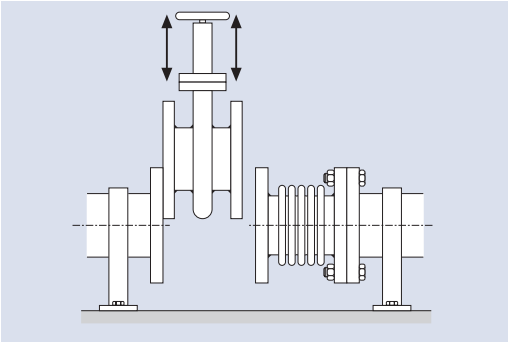

- Install anchor points at the start and at the end:
  If an unrestrained type is used the reaction force must be able to be absorbed in the anchor points.

Installation

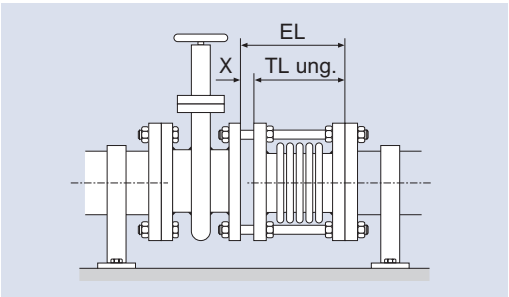

- Flange mount the disassembly joint onto one side of the pipe end. On the other side, tighten onto the components (valve, shut-off gate, pumps, etc.) either using extra-long bolts (unrestrained) or the threaded rods provided (restrained). When installed the disassembly joint is tightly clamped.

Removing

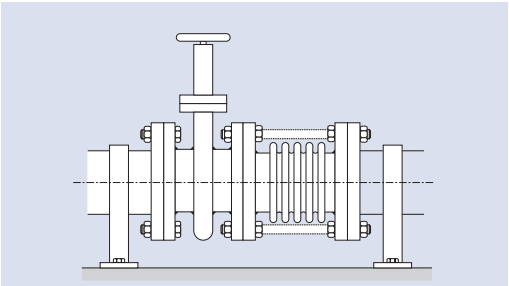

- Undo the extra-long bolts or threaded rods. – The disassembly joint springs back and this creates a gap, which is necessary for convenient dismantling and subsequent re-installation of the components.

Before commissioning, check whether

– the pipes have been laid with a gradient, to prevent water pockets.
– adequate drainage is provided.
– anchor points and pipe guide supports are fixed before filling and pressure testing the plant or system.
– the expansion joint is not subjected to torsion (with the exception of Types BKT-7918… and BKT-7928…, which have built-in torsion protection as a standard feature).
– This is particularly applicable in the case of expansion joints with socket connection.
– in the case of expansion joints with inner sleeves, the flow direction is noted.
– the steel bellows is free of dirt, welding spatter, gypsum and mortar splashes or other contamination. – If necessary clean.
– all bolted connections are tightened.
– the general duty of care to prevent corrosion damage is fulfilled, e.g. water treatment, preventing electrolytes from forming in copper or zinc-plated pipes.

Checking

Insulation

The axial expansion joints can be insulated in precisely the same way as the pipe run.

- In the case of expansion joints without outer sleeve, place a slidable sheet-metal sleeve around the expansion joint so that the insulation material does not sit in the troughs of the convolutions or the joints.
- If the axial expansion joint is to be laid under mortar plaster, an expansion joint with outer sleeve is absolutely necessary. This ensures the function of the joint, protects it from dirt and contact with the construction materials.

Insulation

Impermissible operation

– The limits given in the “axial expansion joints, technical data” brochure must not be exceeded.
– Cradle-mounted suspension anchors are not allowed in the area of the expansion joints!
– New pipes laid must not be cleaned by blowing them out with steam, as there is a risk of water hammers and impermissible vibration excitation of the bellows.

IMPORTANT

- When pressure testing and during operation the allowable test pressure or operating pressure of the expansion joint must not be exceeded.
- Excessive pressure surges as a result of wrong operation, water hammers, etc. are not allowed.
- Avoid inrush of aggressive fluids.
- Steam pipes must be started up so that any condensation arising can flow away.

Starting up

Maintenance

The axial expansion joints are maintenance-free.

- Before any dismantling and maintenance work is carried out, the plant or system must be
  – **depressurised,**
  – **cooled down and**
  – **emptied.**

  Otherwise there is a risk of accidents!

Maintenance

Safety instructions

- Fix anchor points and pipe guide supports before filling and pressure testing the plant or system.
- The expansion joints must not be subjected to twisting (torsion).
- During installation, ensure that the expansion joints are not loaded with the weight of the pipe. Do not exceed the expansion values in the axial and lateral direction and the angular rotation given in the tables (see “rubber expansion joints technical data” brochure).
- Protect the expansion joints from damage and dirt (e.g. weld splatter, gypsum and mortar splashes).
- During welding work, protect the expansion joints from heating and weld sputter.
- Do not paint or insulate the expansion joints.
- Do not coat the sealing strips of the expansion joints with grease, oil, graphite grease, Molykote or similar.
- Install the expansion joints so that they can be monitored and easily replaced at any time.

Installation instructions Allowable overall lengths/operating lengths

The allowable built-in length range for the neutral position must lie between the supplied length (BL) and the supplied length minus A/2 (BL*).
The movement data given in the “rubber expansion joints, technical data” brochure (tables on pages 2, 3, 4) apply to this built-in length range.

- Prestress the expansion joints, taking into account the allowable operating lengths, so that they work virtually free of stresses in all operating conditions.

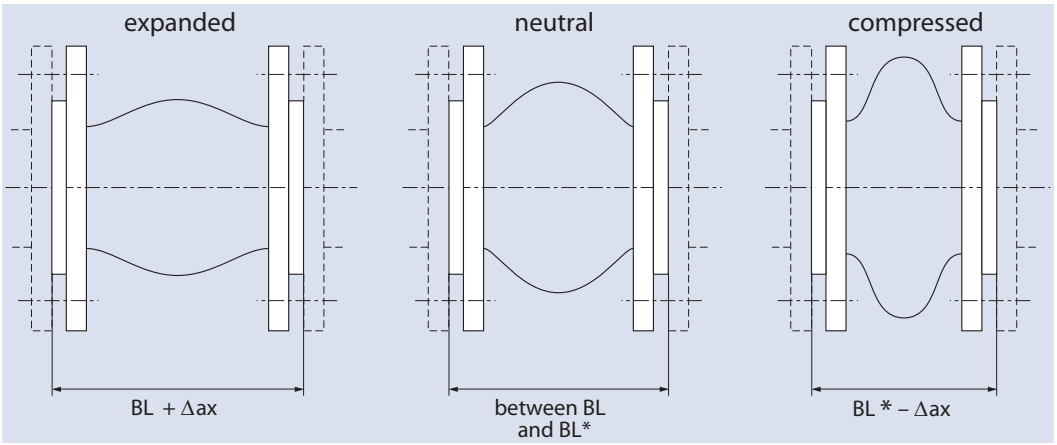

BL = Supplied length
BL* = BL – A/2
Δ_{ax} = allowable movement capacity (A, BL, BL*, Δ_{ax} see “rubber expansion joints, technical data” brochure, pages 2–4)

Correct pairing of the sealing faces

The flanges of the rubber expansion joints have threaded holes.

- Note the following figure for use of the bolts.

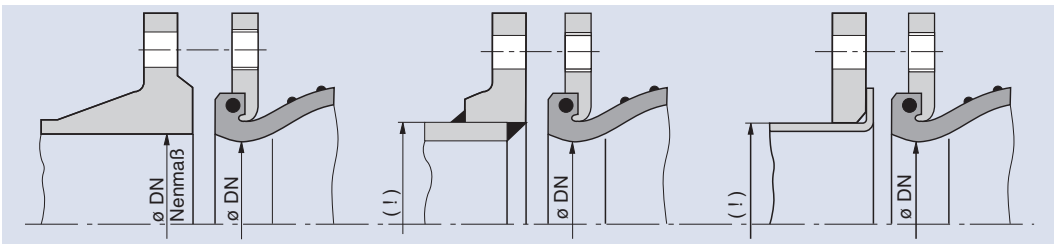

right

wrong

Remedy: Weld pipe flush, resurface (grind) sealing surface

wrong

Remedy: Intermediate ring and gasket

Position and tightening of the bolts DN 25 – DN 500

Type A (313) Type D (323) Type B (303)

The sealing function is achieved by uniform compression of the sealing rim, therefore, install in the following order:

- Tighten 4 bolts crosswise against 4 spaces (thickness A / 2).
- Tighten the remaining bolts without applying excessive force.
- Remove spacers,
- After installing the expansion joint (3840 DFS-A-…, 3840 DFS-B-…, 3840 DFS-D-…) check the hexagonal bolts by turning them.
- Check all tie bars for uniform sluggishness and if necessary re-tighten.

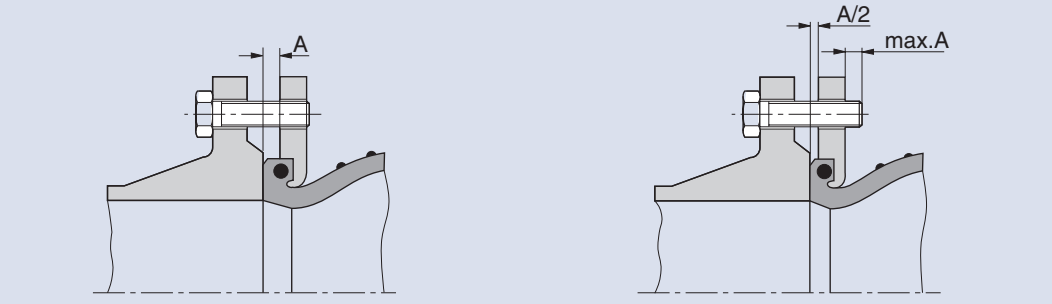

Flanges with threaded hole

The following sketches must be noted and followed for use of the bolts and nuts for flanges with through hole. Installation preferably as shown in diagram ⑩.

If installed as shown in ❡, a flat side of the nut must face the bellows. The height of the nut must not be larger than 0.8 x bolt diameter or use nuts to DIN 439-AM 04-04.

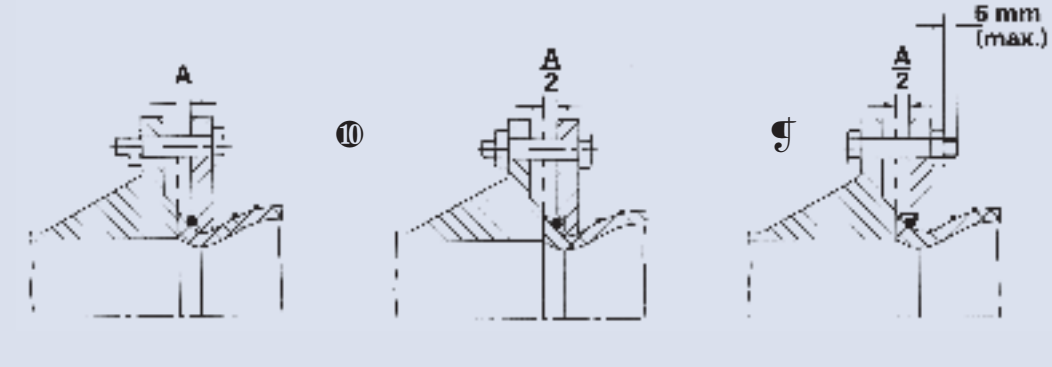

Flanges with through hole

Table "A" dimensions (mm), torques (Nm)

DN	Type A (313)		Type D (323)		Type B (303)	
	mm	Nm	mm	Nm	mm	Nm
25	6.5	30	–	–	–	–
32	6.5	30	–	–	8	30
40	8	30	6.5	30	8	30
50	8.5	40	7	40	8.5	40
65	9	40	7.5	40	9	40
80	8.5	40	7	40	8.5	40
100	11.5	40	8.5	40	11.5	40
125	12.5	60	11	60	12.5	60
150	13	60	11.5	60	13	60
200	15.5	100	14	100	15.5	100
250	16.5	100	15	100	16.5	100
300	15.5	100	14	100	15.5	100
350	16	100	–	–	13	100
400	16.5	120	–	–	15	120
450	17.5	120	–	–	16	120
500	17.5	120	–	–	17	120

Position and tightening of the bolts DN 25 – DN 200

Type S (333)

Tightening torque for installation of the types 3140 00S-S-EPDMT 3840 00S-S-EPDMT	
DN	Torque
25/32/40	27 Nm
50	31 Nm
65	38 Nm
80	23 Nm
100	28 Nm
125	31 Nm
150	47 Nm
200	60 Nm

The sealing function is achieved by uniform compression of the sealing rim. Therefore, install with the tightening torques given in the table.

- After installing the expansion joint (3840 DFS-S- …), check the hexagonal bolts by turning them.
- Check all tie bars for uniform sluggishness and if necessary re-tighten.

Position and tightening of the bolts DN 600 – DN 1000

Type C

Table of "A" dimensions

DN	Type C
600	15
700	15
800	20
900	20
1000	20
1200	25
1400	30
1600	30
1800	30
2000	30

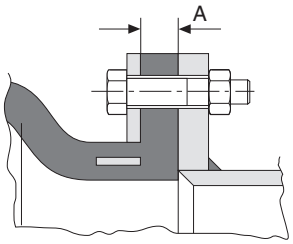

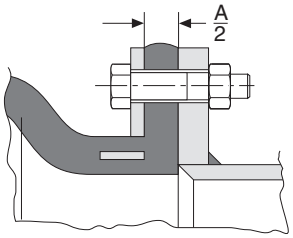

Pipe support, pipe guide supports

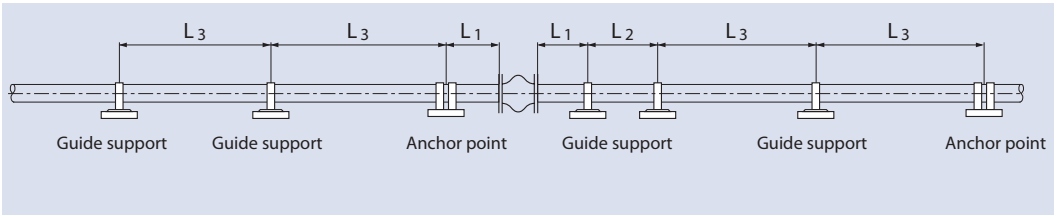

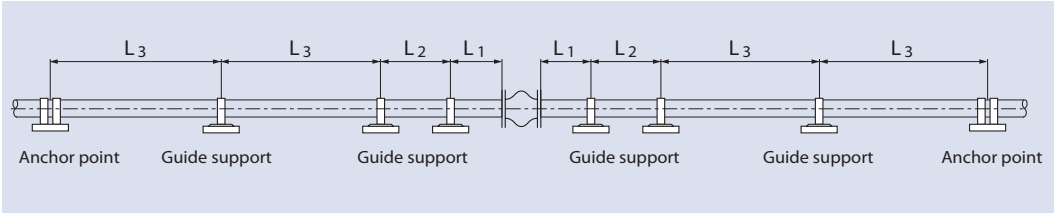

L_1 = max. 2 x DN + Δ / 2 (mm)
L_2 = 0,7 x L_3 (mm)
L_3 = 400 x $\sqrt{DN}$ (mm) (guide vale)
Δ = Movement capacity of the expansion joint (mm)

Diagram

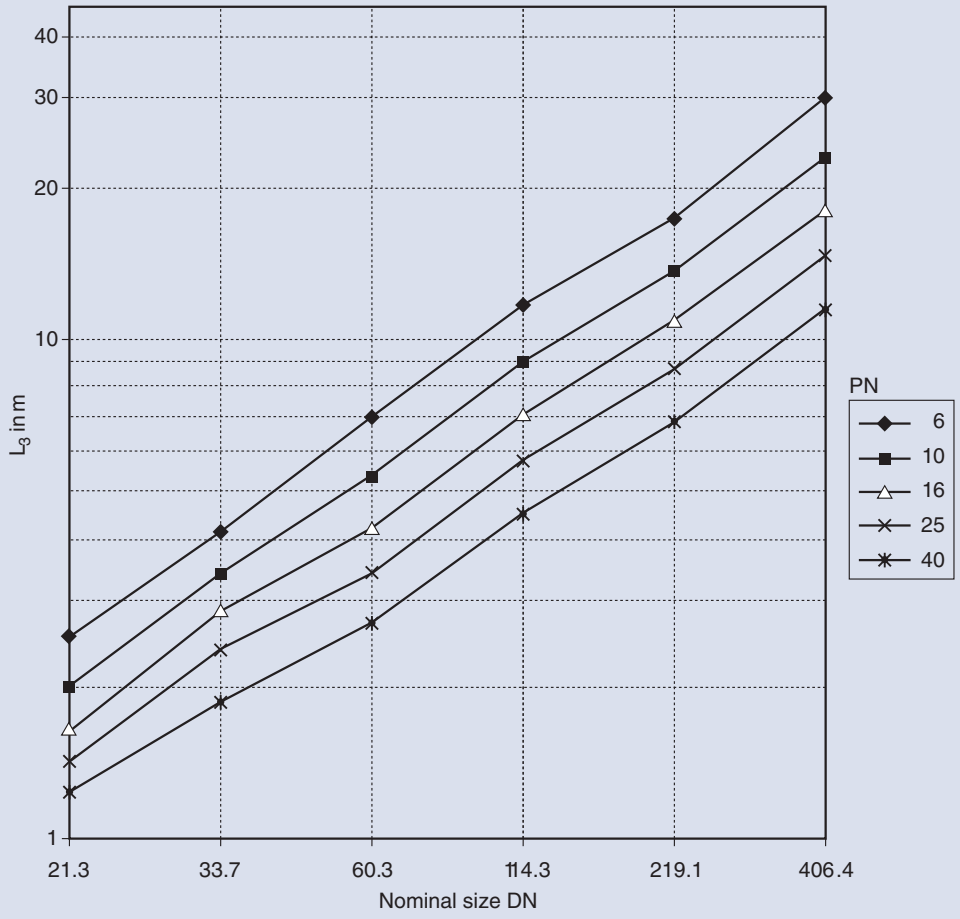

[1] with standard wall thickness to DIN 2458

The suggested safety factor is: S = 3.

According to Euler, the length factor β depends on the type of pipe support:

—X———X—	—X———≡—	—≡———≡—	X = Fixed bearing (anchor)
β = 1	β = 0.7	β = 0.5	≡ = Loose bearing

For fast determination of the maximum guide spacing, we recommend you use the diagram, which is based on the following assumptions:

- β = 1, "Pinned" support of the pipe in the guide supports, i.e. no moment transfer,
- E = 210 000 N/mm^2, for steel pipes,
- D_a and s of welded standard pipes to DIN 2458 with standard wall thickness,
- $p = p_T = 1.43 \times PN$, as the max. test pressure according to the EC Pressure Equipment Directive,
- $F_c = 0$; i.e. axial expansion joints in neutral position during the pressure test.

This assumption is conservative, as prestressed expansion joints would reduce the buckling tendency. Regardless of this, tests have shown that in very small nominal sizes, comparatively high displacement forces on expansion joints compressed by the maximum allowable amount cause higher buckling forces to occur in practice than during the pressure test.

Anchor points

Axial expansion joints

- Use anchor point to limit each pipe length to be counterbalanced.
  - Only one expansion joint may be installed between two anchor points.
  - Misalignments in the pipes are also fitted with anchor points. These must absorb the axial reaction forces of the expansion joints and the frictional forces of the guide supports.

NOTE
The axial pressure thrusts can be determined using the diagrams on pages 14, 15 + 16 of the brochure: “Rubber expansion joint technical data”.

Restrained expansion joints

Restrained rubber expansion joints have external restraint with noise-absorbing support, which is dimensioned to absorb the pressure thrust.

- Dimension the anchor points so that if the expansion joint is used as a
  - vibration absorber, they prevent swinging up.
  - hinged expansion joint they can absorb the pipe frictional forces and the very small displacement forces.

Vibration compensation

- Wherever possible, the rubber expansion joint used as a vibration absorbing and noise reducing element must be mounted directly on the vibrating unit.
- Position an anchor point directly behind the expansion joint which, if unrestrained expansion joints are used, can absorb the full pressure thrust.
- If restrained expansion joints are used, provide a guide, in order to prevent the subsequent pipe system from swinging up.

NOTE

- If expansion joints are used as vibration absorbers, install expansion joints without prestressing.

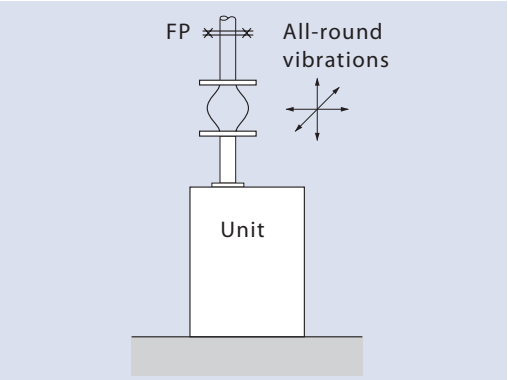

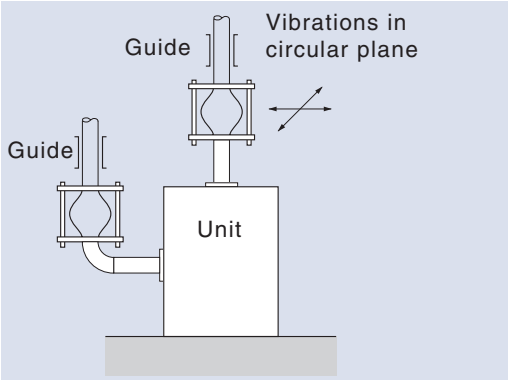

Filling the plant

- Fix anchor points and pipe guide supports before filling and pressure testing the plant or system.
- When pressure testing the pipe, the allowable test pressure of the expansion joint must not be exceeded. – The pressure should rise slowly.

Ship technology

Fire sleeve required for:

petrol, lubricating oil, hydraulic oil, bilge, ballast and salt water cooling systems

Fire sleeve not required for:

freshwater cooling systems, sanitary systems without connection to the hull, ballast pipes outside of machine rooms, compressed air systems

BOA Group

Type 3160 00S-A – …

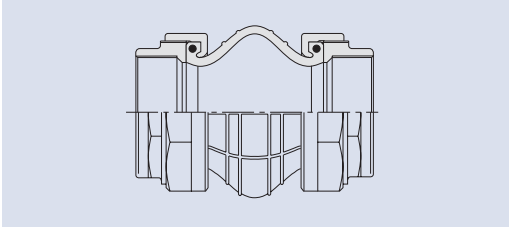

Type 3160 00S-B – …

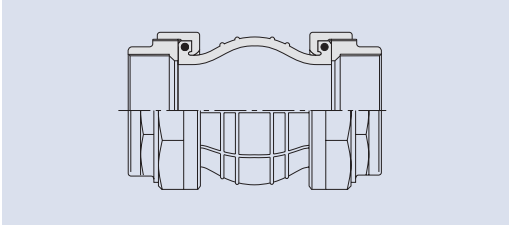

Type 3160 00S-D – …

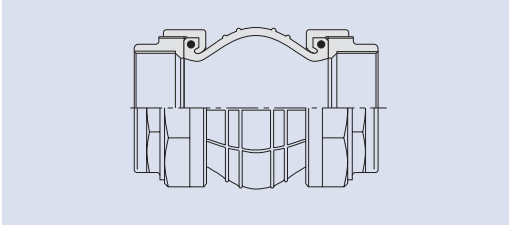

The expansion joints are delivered pre-assembled. A lubricant is applied to the sealing surfaces in the factory.

- When installing, screw in the screw parts by hand until they sit against the rubber sealing rim. Then use suitable tools to tighten an additional 1 to 2 turns to ensure leak-tightness of the bolted connection.

Rubber/metal pipe joint IGMV

Rubber/metal pipe joints can be used to insulate noises, e.g.

in pipes,
at pumps,
at valves,
at compressors
and other units.

The smooth cylindrical rubber body has good elasticity. The steel flanges are fully vulcanised in the rubber body. The fluid can therefore not come into contact with the steel parts.

They cannot be used for

- **vibration absorption**
- **compensation of expansions**
- **removal of stresses.**

Pipe guide/ anchor points

Rubber/metal pipe joints must be installed to enable perfect routing of the pipe.

In particular, adequately dimensioned anchor points must be provided to prevent pulling apart.

Nominal bolt length

The length of the bolts to be used must be calculated taking into account the flange thickness and max. allowable engagement length (see table on page 63, dimension “b”).

See also installation instructions, which are enclosed with each rubber/metal pipe joint.

Checking

Before commissioning, check whether
– the pipes have been laid with a gradient, to prevent water pockets.
– adequate drainage is provided.
– anchor points and pipe guide supports are fixed before filling and pressure testing the plant or system.
– unrestrained expansion joints are protected against impermissible expansion, caused by internal pressure, by adequately dimensioned anchor points.
– the expansion joint is not subjected to twisting (torsion).
– the expansion joints are free of dirt, welding spatter, gypsum and mortar splashes or other contamination. – If necessary clean.
– all bolted connections are tightened.

Impermissible operation

The limits given in the brochure “rubber expansion joints, technical data” must not be exceeded.

Starting up

IMPORTANT
- When pressure testing and during operation the allowable test pressure or operating pressure of the expansion joint must not be exceeded.
- Excessive pressure surges as a result of wrong operation, water hammers, etc. are not allowed.
- Avoid inrush of aggressive fluids.
- Steam pipes must be started up so that any condensation arising can flow away.

Maintenance

Maintenance
The rubber expansion joints are maintenance-free.
- Before any dismantling and maintenance work is carried out, the plant or system must be
  – depressurised,
  – cooled down and
  – emptied.
  Otherwise there is a risk of accidents!

Handling and installation

The metal hose assembly must be protected against mechanical damage (e.g. cutting through braid wires, severe kinking or buckling, pulling the metal hose assembly along the floor or over sharp edges). Torsion results in premature failure. If extreme mechanical loads occur, fit the metal hose with an external protective hose or protective coils.

Lay the metal hose assembly straight and unroll. This prevents from underrunning the minimum bend radius and avoids torsion.

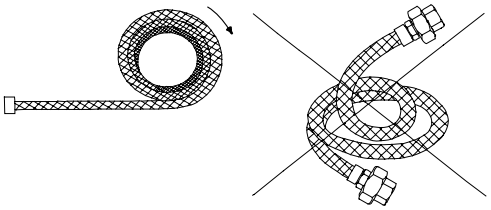

Use of a saddle or roller avoids buckling and therefore radii smaller than the minimum bending radius.

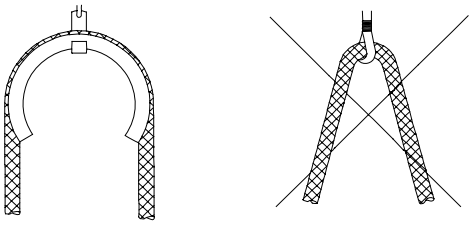

Install the metal hose assembly without stresses. Torsion results in premature failure. Therefore, always fit the metal hose with a movable connection on one side (threaded coupling, loose flange).

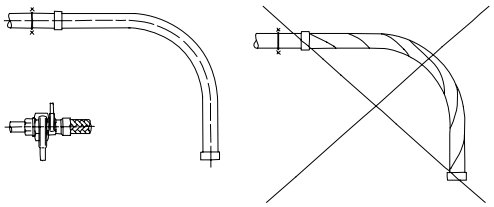

Uniform crosswise tightening of the bolts, to achieve improved leak tightness.

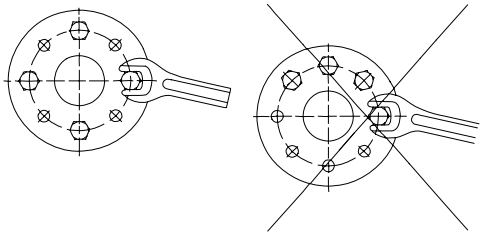

If installing the metal hose assembly by welding or soldering, ensure that the soldered joint between the hose fitting and the corrugated metal hose is protected and cooled. The naked flame must always be kept away from the metal hose assembly.

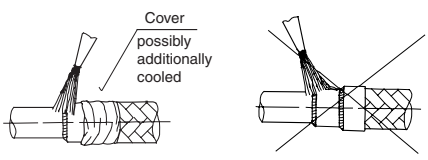

Subject to change without notice

Handling and installation

During manual use the hose connection must be protected against bending stresses. Do not misuse the hose as a pipe bend.

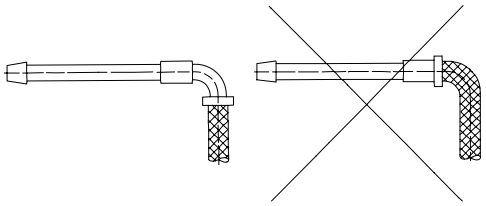

Do not install the metal hose assembly in compressed position. The braid must not detach from the metal hose.

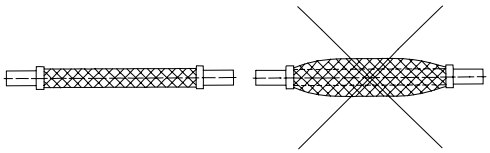

Installation to absorb thermal expansions

Install metal hose assembly with lateral prestressing to make use of the allowable expansion (maximum ±100 mm). Avoid compression.

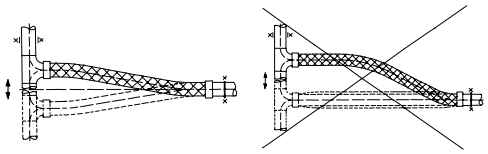

The metal hose assembly must be installed at right angles to the movement direction. The hose must only take up lateral movements, not axial ones.

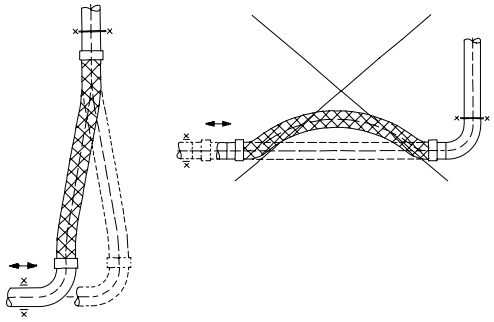

Installation to absorb thermal expansions

If the lateral movements are large, install in 90° bends.

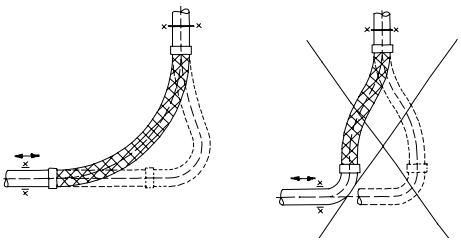

Compensation of expansion is only allowed in the hose plane. Strictly avoid torsion.

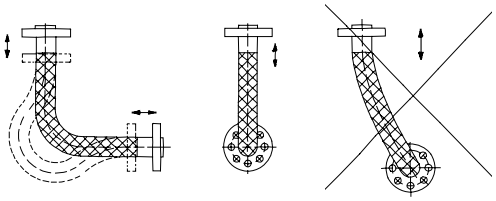

In case of large axial expansions, the hose must be installed in the form of a U bend, to protect it from buckling. The U bend is the preferred form of installation for large movements.

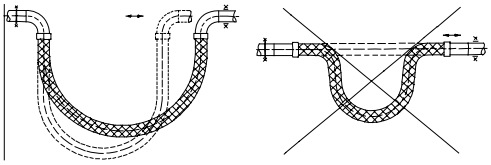

Installation to compensate for parallel pipe misalignments

It is necessary to calculate the precise hose lengths, to avoid overlength or short length, which may cause buckling of metal hoses.

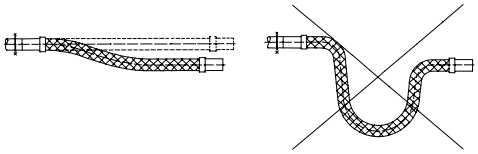

Subject to change without notice

BOA Group

Calculate the precise nominal length, so that the radius is not smaller than the nominal (dynamic) bend radius. A bend radius smaller than the nominal bending radius reduces life expectancy.

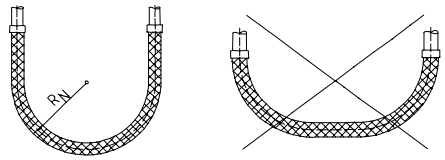

Use rigid pipe elbows for the connection to protect the metal hose assembly from over-bending.

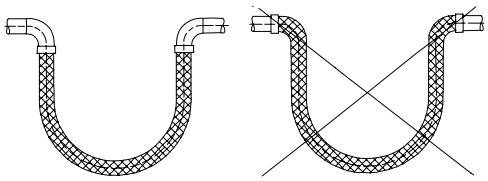

Movement is only allowed in the hose plane. Torsion results in premature failure.

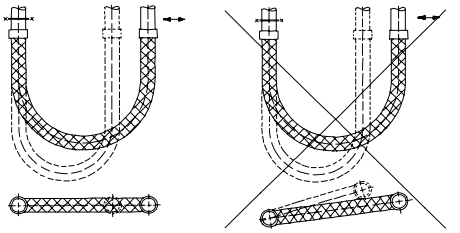

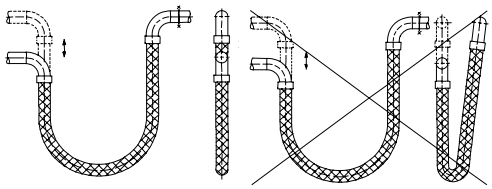

Install in the form of a U bend, as compression or over-bending occurs in case of large movements.

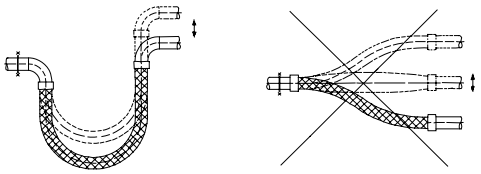

In case of horizontal installation, the dead weight of the metal hose filled with fluid must be supported for horizontal installation. This can be achieved using a roller or other support.

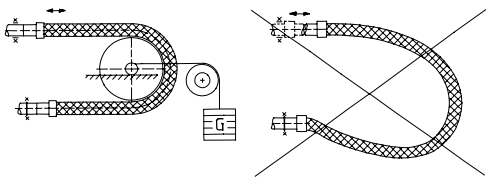

Installation to absorb vibrations

The metal hose assembly must be installed at right-angles to the direction of vibration, to prevent compression of the metal hose during operation.

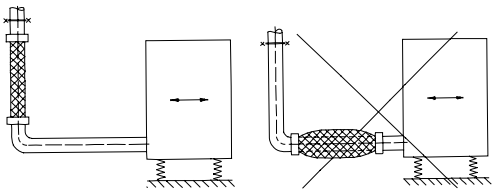

If vibrations occur in two directions, install the metal hose assembly in 90° bends.

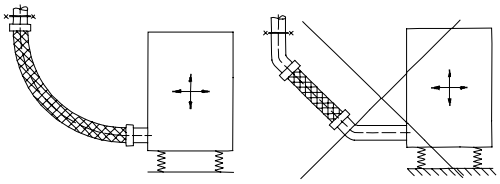

If large nominal sizes are used (PARNOR from DN 100, PARRAP from DN 125), two metal hoses must be installed by connecting them with rigid angle brackets.

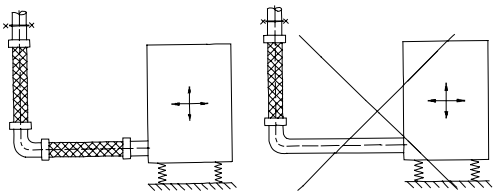

The total length of the metal hose assembly must be adequately calculated for the installation case. If you have any questions, please contact BOA BKT GmbH, D-76288 Stutensee, or contact the factory's office or representatives.

Notes

Application examples

Rubber expansion joints in central heating plants

Rubber expansion joints at pumps

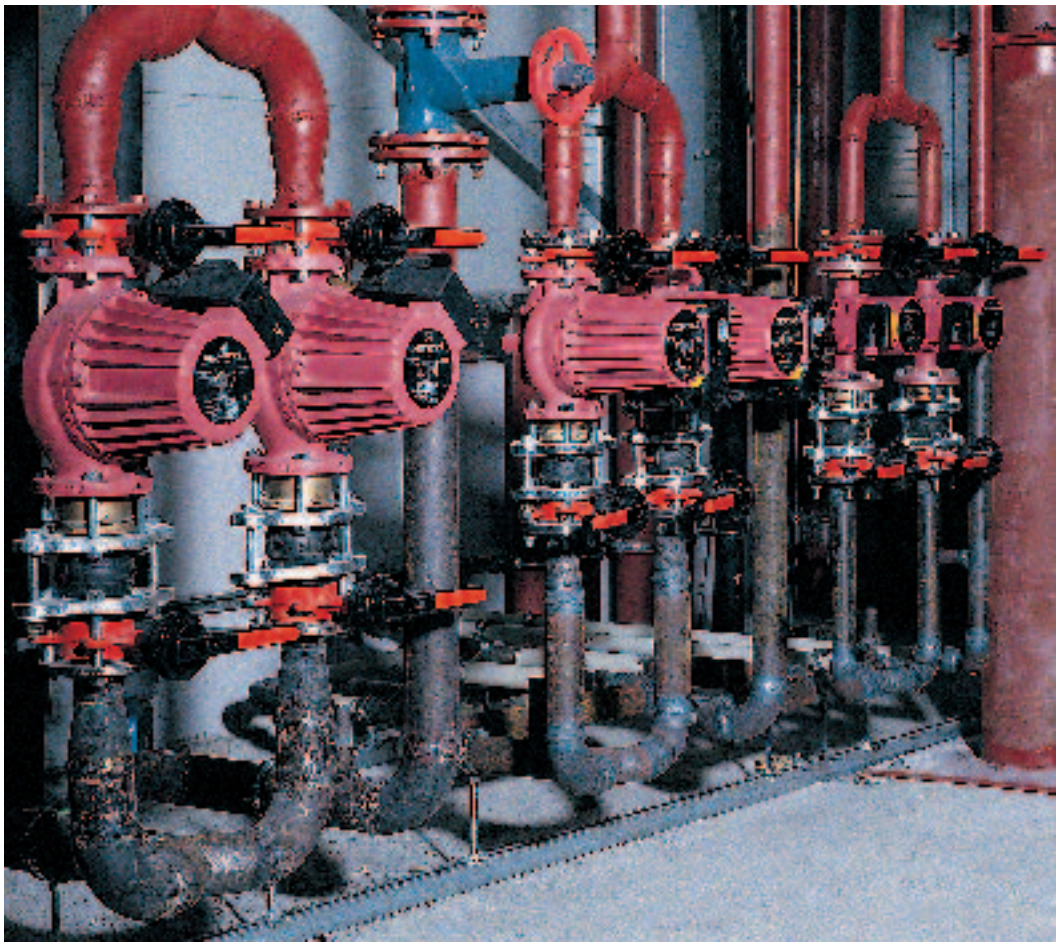

Application examples

Vibration absorbers at pumps

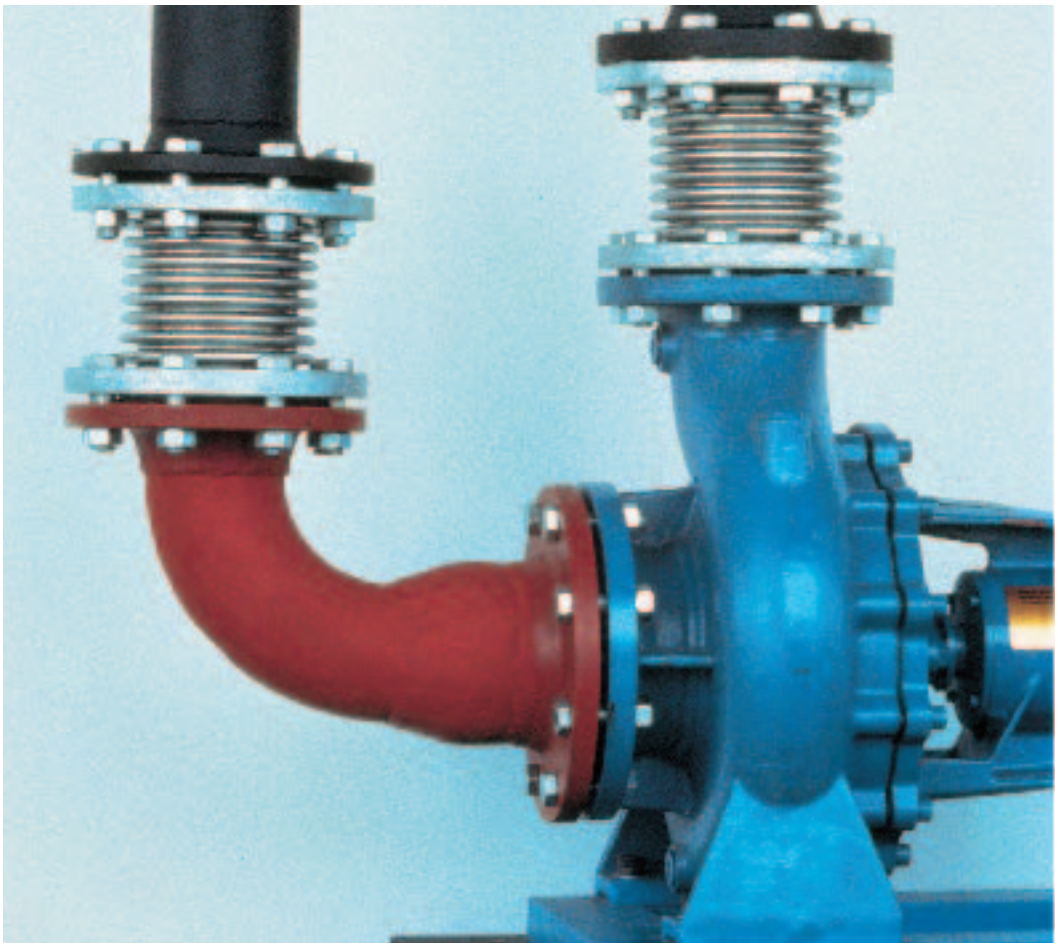

Application examples

Sound absorbing expansion joints in building substations

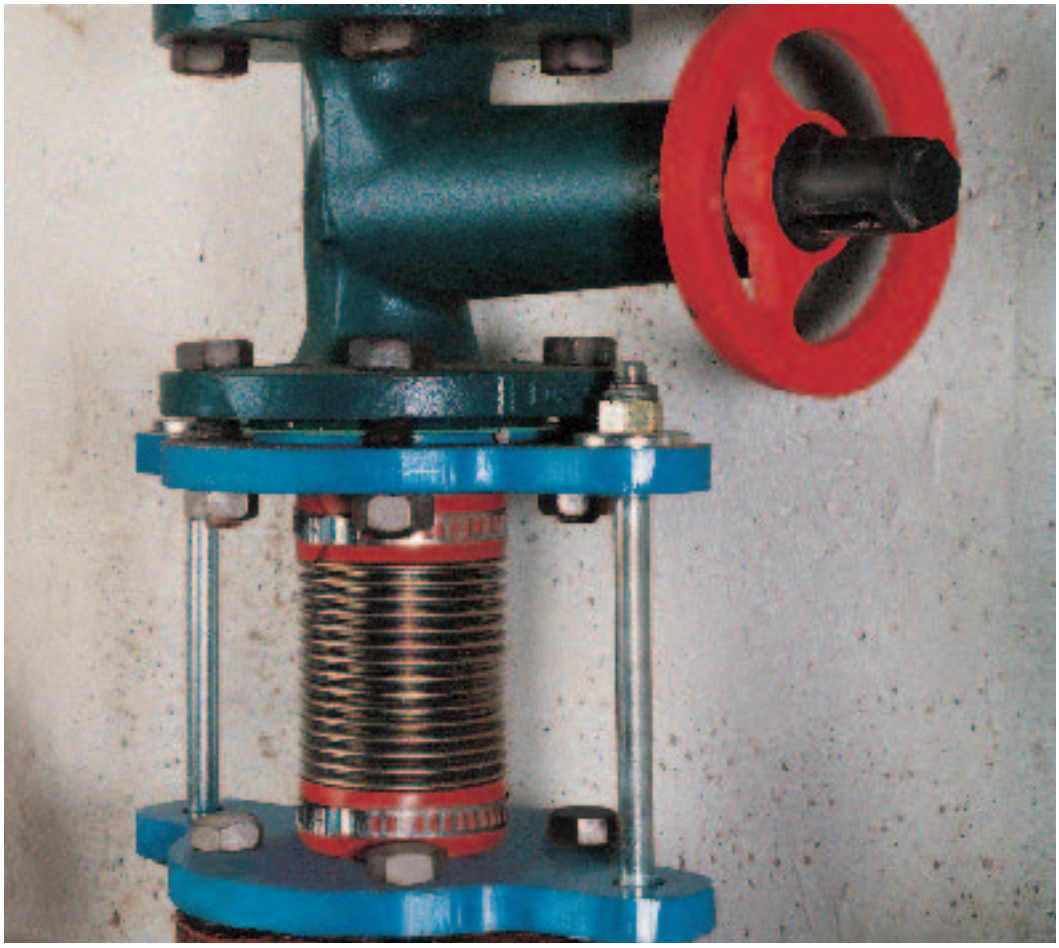

Axial expansion joints in heating distribution pipes

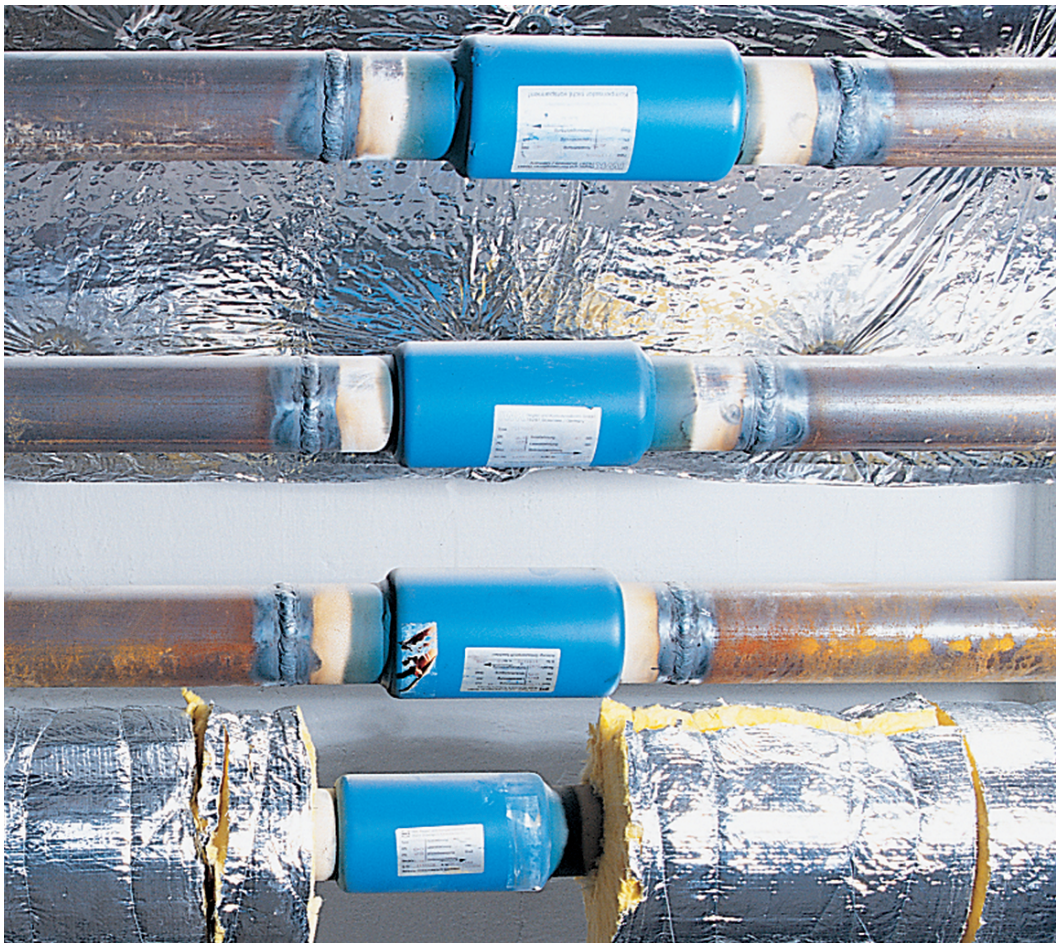

Expansion joint data sheet

Expansion joint type: _____
Nominal size DN: _____

Design conditions
Design pressure _____ bar
Design temperature _____ ° C
Absorption capacity
1 axial +/– _____ mm
2 angular +/– _____ grd
3 lateral +/– _____ mm
Vibrations, frequency _____ Hz
Amplitude _____ mm
Vibration mode: _____

Number of life cycles _____
Fluid _____
Flow velocity _____

Attachments:
Internal sleeve ◯ yes ◯ no
Protective tube ◯ yes ◯ no
Other parts _____
_____
_____
_____
_____

Type of connection: **Dimension/ material:**
◯ Weld ends _____
◯ Fixed flange _____
◯ Loose flange _____
◯ Other: _____

Allowable technological values:
Axial spring rate _____ N/mm
Lateral spring rate _____ N/mm
Angular spring rate _____ Nm/grd
Axial force _____ N
Lateral force _____ N
Angular moment _____ Nm
Pressure thrust _____ N

Available space:
Maximum length: _____ mm
Max. diameter: _____ mm

Quality controls:
Hydraulic test ◯ yes ◯ no
Leak-tightness test
with air ◯ yes ◯ no
with helium ◯ yes ◯ no
Leakage rate _____ mbar l/s

Additional individual tests		BL	RL	BRR	RR	Other
X-ray	%					
Dye penetration test	%					
Ultrasound	%					
Magnetic particle crack test	%					

BL = bellows, longitudinal welds
BRR = bellows, circumferential pipe welds
RL = pipe, longitudinal welds
RR = circumferential pipe welds

Acceptance conditions
Rules and standards _____
Special specifications _____
Inspection certificate, factory test certificate _____
Acceptance by _____

BOA Balg- und Kompensatoren-Technologie GmbH
Lorenzstraße 2-6
D-76297 Stutensee

Postfach 11 62
D-76288 Stutensee

Phone: +49 (0)7244 99-0
Fax: +49 (0)7244 99-372
E-mail: kompensatoren@boa-bkt.com
Internet: www.boagroup.com

60 000 80510
BK.1012.1.1.en.Sto.2244